MASS. INST. OF TECHNOLOGY
JUN 23 1965
LIBRARIES

DESIGN OF AN EXTERNALLY POWERED ARTIFICIAL ELBOW FOR ELECTROMYOGRAPHIC CONTROL

by Ronald Rothchild

Submitted in Partial Fulfillment of the
Requirements for the Degree of Master
of Science
at the
Massachusetts Institute of Technology
21 May 1965

Signature of Author ..... Signature redacted
Department of Mechanical Engineering,
21 May 1965

Certified by ..... Signature redacted
Thesis Supervisor

Accepted by .....
Chairman, Departmental Committee
of Theses

This thesis was supported in part by the Liberty Mutual Co., and sponsored by the Division of Sponsored Research of M.I.T.

ACKNOWLEDGEMENTS

The author wishes to express his sincere appreciation to Professor R. W. Mann for his help and continued interest, and for his great patience through all stages of this project.

The author also expresses thanks to Mr. M. Burnstein and Mr. C. W. Christiansen for their help, and to the several companies, mentioned elsewhere in the text, for their co-operation in providing data and components for this project.

ABSTRACT

A prosthetic elbow has been built which satisfies or surpasses all NAS-CPRD criteria* for such devices, except the restriction to a 12 volt electrical system. The device provides proportional control of elbow torque from an electrical signal and also continuous self-locking so that no power is used to hold a load stationary. The proportional control signal to be used was assumed to be derived from muscle EMG output and control circuitry was designed accordingly, although any proportional electric input may be used. EMG control has the advantage of providing meaningful force feedback to the operator.

*see appendix F

TABLE OF CONTENTS

Acknowledgements

Chapter One - System Requirements

I. Design Objectives 5

II. Explanation of Development 7

Chapter Two - Design Characteristics

I. Design Deficiencies 13

II. Design Advantages 16

Chapter Three - Recommended Modifications 19

Chapter Four - Summation 24

Appendices

A. Diagrammatic Representation 27

B. Cost of the Prototype 32

C. Derivation of Force Feedback Gain 33

D. Dynamic Analysis 34

E. Drawings 39

F. Relevant CPRD-NAS Criteria 40

G. Performance Curves 41

Bibliography 45

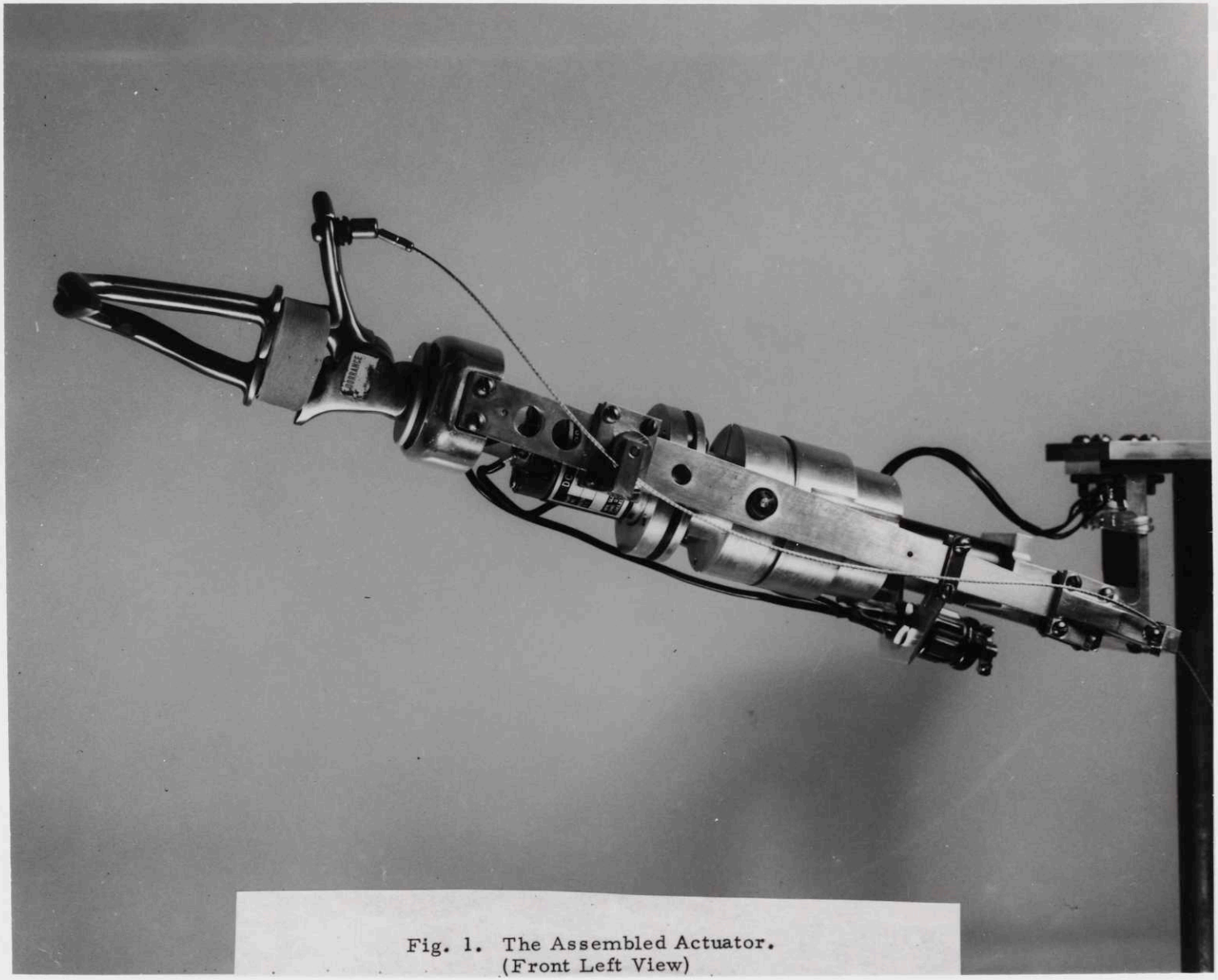

Fig. 1. The Assembled Actuator.
(Front Left View)

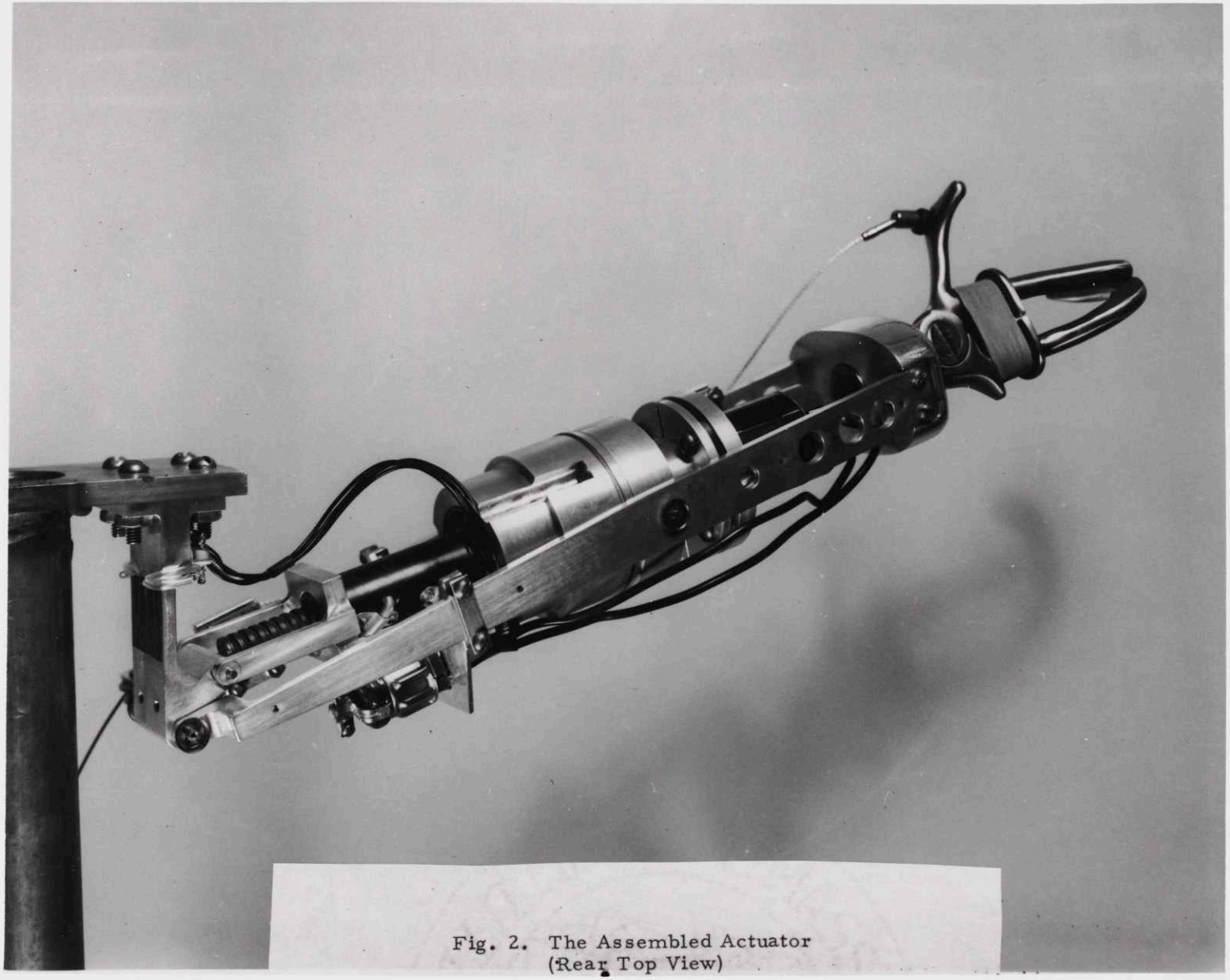

Fig. 2. The Assembled Actuator
(Rear Top View)

CHAPTER ONE

SYSTEM REQUIREMENTS

I. DESIGN OBJECTIVES

The Committee on Prosthetic Research and Development of the National Academy of Science has stipulated that a prosthetic device should not weigh more than 60% of the limb it replaced. Due to possible variation in the distribution of this weight from one device to the next, the arbitrary 60% figure may not always be appropriate. However, qualitatively, light weight is important. Carrying a small machine is very different from carrying a part of oneself of the same weight. An attempt was made to keep the device as light as possible while using standard industrial components throughout.

Of greater importance is the device's moment of inertia about it's degree of freedom; in this case the elbow. There are no quantitative criteria for this parameter but it also should be small. If possible, the actuator and drive train components should be located in the above elbow section. However, in order to accomodate possible very long upper arm stumps, It was necessary to keep the above elbow portion of the device as short

as possible, and therefore to locate this machinery in the forearm section. An electric motor and screw actuator were used. There are about 1½" of forearm length adjacent to the elbow which is unoccupied in flexion but is occupied by the upper arm section in extension. To make efficient use of this space, the screw end of the drive train must be adjacent to the elbow, with the motor toward the other end of the forearm section. Thus, the screw occupies the aforementioned space in flexion.

It was considered important to give the device a maximum speed approaching thet of a normal elbow. To do this the device must either have very little reduction gearing, which sacrifices elbow torgue, or must have relatively low friction losses. A low friction ball screw was used. The ball screw, having little friction, is not self locking so that holding a stationary load would require constant torque output from the motor, and consequent drain of power. To correct this deficiency a reverse locking clutch was placed between the motor and screw.

While the performance of this assembly is more than adequate, the clutch is too heavy for this application. The clutch is an industrial

unit rated at 90 in.-lb. torque and weighs almost a pound. The maximum torque output of the motor is 5 in.-lb. Primarily due to the clutch, the forearm moment of inertia about the elbow is nearly as great as that of a normal arm.

The use of EMG control signals was anticipated and an all electric system was built so that only one type of energy storage is required

For details, see appendix B

II. Explanation of Development

a) Efficiency and Power Requirement

The amount of energy that can be carried on one's person is severely limited. We used nickel-cadmium batteries, which are quite widely used, for energy storage. While these do not have as much energy per unit weight as other types, they are readily available and more economical. A realistic estimate of their energy is about 8 watt-hr./lb.

It is desireable to conserve energy with as efficient a device as possible. Major losses in most proportional control devices are:

Control circuitry-Efficiency may vary between 0-80% depending on load and operating conditions. average e=50%

Motor-Varies between 0-70% depending on type of motor and load.For permanent magnet motor, average e=40%

Gear reduction-Generally, e=70%

Screw or worm gear actuator-For self locking, the maximum theoretical efficiency obtainable approaches 50% as u approaches 0 (square thread) Maximum practical efficiency is in a porous bronze on steel unit with 14° helix angle; e=30%

In addition, because a high friction drive train uses almost as much power when lowering a load as when lifting, overall efficiency will have to include an additional e=50%

With all these factors considered and multiplied, the average efficiency of devices now available is:

e=2%

In contrast, the efficiencies which are possible with presently available technology are as follows:

Control circuitry- With switching or parametric power stages; e=80%

Motor- Permanent magnet type run at constant load; e=70%

Gear reduction- e=70%

Actuator- Ball screw with reverse locking clutch; e=90%

And because the ball screw actuator uses no electrical energy in lowering a load, the

efficiency factor for two way operation; e=90%

Overall efficiency of this well engineered device would be:

e=32%

Efficiencies in the device developed during this project are;

Control circuitry- Switching power amplifier; e=80%

Motor- Permanent magnet type; e=40%

Gear reduction- e=70%

Actuator- Ball bearing type with R-L clutch; e=90%

Effective efficiency when lowering loads; e=90%. The overall efficiency of this device is;

e=18%

To illustrate the effect of efficiency , consider flexing the elbow with a five pound weight at the hand. The weight is raised about 2 ft., so the energy transfer is 10 ft.-lb., or .004 watt-hr. The number of times a five pound load can be lifted, per pound of batteries is:

e=2%; 40 lifts/lb.(batteries)

e=18%; 360 lifts/lb.

e=32%; 640 lifts/lb.

In addition to conserving energy, the low friction drive train allows a range of performance

not previously considered practical, with high elbow output torque and high no-load flexion speed.

For details, see appendices B & E

b) The Control System

This is a very straightforward system with a DC motor- actuator and DC input (see figure 3). Overall gain is 20-25 in.-lb. elbow torque per volt input.

Force feedback is included primarily to take advantage of the self locking feature of the drive train. With the output torque such that the force feedback signal is approximately equal to the input, the error is close to zero, within the deadband in the forward loop. Then the power to the motor is zero, and the output torque is is sustained by the reverse locking clutch.

Velocity feedback was included as an afterthought. The motor has its own velocity feedback in the form of back EMF, but this was not found sufficient. Without the additional feedback slow motions were jerky due to starting friction, primarily in the motor gear train.

Force feedback is provided by a strain gauge bridge which measures the bending moment in the above elbow section. Velocity feedback is by

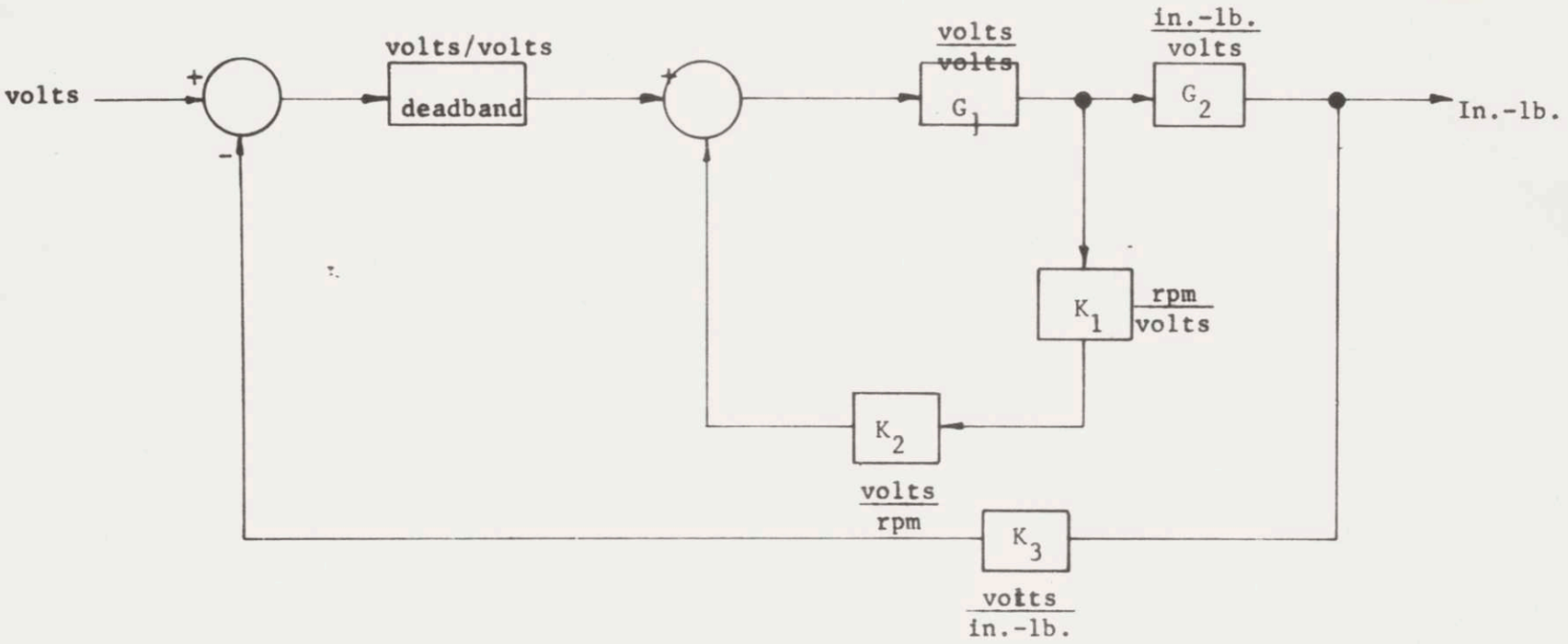

The Control Loop

figure 3

measuring and amplifying the motor back EMF.

For details, see appendices A, B, C, and D.

c) Permanent Magnet DC Motor

This is the lightest and most efficient type of electric motor available in the given power range (.01 hp.). In addition, it is reversible by changing the direction of the input current and has linear characteristics. As a result, this type is potentially the best fit for prosthetic requirements. However, if used over a wide range of speeds and loads, efficiency drops rapidly and current increases at higher loads. In addition to the power drain which this causes, the higher current tends to demagnetize the field magnets. Prosthetic use involves a very wide range of loads, varying from the weight of the device itself to that of a load being lifted. As a result, PM motors in prosthetic applications will have relatively short life. Before a reliable device can be produced, either a suitable replacement must be found for the PM motor,or this difficulty must be overcome bycompensation of some sort.

For details, see appendix G

CHAPTER TWO

DESIGN CHARACTERISTICS

I. Design Deficiencies

a) Excessive Weight

The device weighs slightly over two pounds, which is considered too heavy for an above elbow prosthesis. It also has too much inertia for an external power device as lively as this one. Therefore, weight must be cut before the device is a practical prosthetic aid. This raises some problems since the standard motor and drive train components account for almost 1½ lb.; the supporting structure is already about as light as it can be made. The reverse locking clutch accounts for almost one pound.

Considering the distribution of weight (primarily in the forearm section), the device must weigh under 1½ lb. before it can be fitted on an amputee.

b) Circuitry is Expensive

Control circuitry for the arm was designed to be entirely dissipative, and components were therefore chosen for high power capacity.

However, circuit dynamics are such that the power amplifier is in fact a two state modulator. Efficiency is therefore increased, but the circuit design is wasteful in the number and cost of components used.

See appendix E for details.

c) Impedance Seen by Motor is Variable

The motor drives the arm via a constant reduction drive train composed of gear reduction, a screw actuator, and the arm linkage geometry. The choice of drive train ratios was dictated by the need to make the maximum operating speed of the motor correspond to a nearly natural maximum flexion speed. Since the gear reducer and screw are available standard in certain fixed ratios, the geometry was chosen to provide 180 deg./sec. flexion speed at 18,000 rpm motor speed. As a result, the load seen by the motor when the arm is lifting five pounds is five times as great as when lifting one pound (no external load). Therefore, the high efficiency of the PM motor is taken advantage of only at very light loads.

With higher loads, motor current increases (torque is proportional to current) so back EMF and therefore speed must decrease. Efficiency

drops rapidly to zero (at stall). In addition to the direct disadvantage of inefficiency, there are problems of control circuitry with high current output capability, and decreased motor life due to field demagnetization.

For details, see appendix A.

d) Insufficient Rigidity in Above Elbow Section

To achieve the feedback gain required in volts per in.-lb. of bending moment, the upper arm section on which the feedback strain gauges are mounted is very thin. This results in a low safety factor which would not be permissible in a production item. The section would be expected to yield if a load of 15 lb. were lifted. Also the upper arm section has too low a spring rate in bending, causing inappropriate dynamics under some conditions.

For details, see appendix C.

e) Backlash

There is about an inch of backlash at the terminal device, due primarily to tolerances in the thrust bearing assembly, ball screw, and bushings, which are magnified by the geometry. This backlash was expected to increase with

time as the Delrin AF plastic bushings in the elbow, forearm, and upper arm pin joints wear, but wear has not been a problem and backlash has not increased significantly.

II. Design Advantages

a) Continuous Self Locking

The device is self locking due to the inclusion of the R=L clutch. This feature combined with the force feedback results in a system in which the operator is required to flex his muscle and provide an EMG input to hold an external load. This approximates the situation with a normal arm. At the same time no current is supplied to the motor to produce the sustaining torque (as this is provided by the clutch), since the error signal is near zero, within the forward loop deadband.

For details, see appendices A and D.

b) Efficient Drive Train

The self locking feature is not unique in prosthetic applications as nearly all devices to date have used a worm gear or screw actuator, although without force feedback. The difference

is that drive train efficiency has been in all cases between 7-20%. The 20% efficiency has been achieved only with non-standard, special helix angle screws. This efficiency figure includes the entire drive train, excluding the motor or other actuator. The drive train efficiency in the device described here is 60-65%, as a non- locking ball screw was used, relying on the R-L clutch for the selflocking feature.

c) High Speed and Load Capability

While the motor used is a standard one, widely used in prosthetic devices, the efficient drive train allows a level of performance not previously available. Flexion time with no external load is under 3/4 second. Speed decreases as load increases, and the load at stall is about 10 lb. at the terminal device (with a 2 ohm resistor in series with the motor to prevent excessive current at stall).

For details, see appendix G.

d) Use of Standard Components

In the interest of economy, standard, as opposed to custom or home-made components were used throughout. This includes the motor,

clutch, screw, strain gauges, and several amplifiers and smaller components.

The only serious mismatch was the clutch. As a standard industrial unit, this is rated at 90 in.-lb. torque, while only 5 at the most is required. The excess capacity in itself is not a problem, but the device weighs almost a pound.

The use of standard components has kept the cost of the prototype within reason.

For details, see appendix B.

e) Performance Criteria Satisfied

The system is compatible with EMG derived input and works reliably. Feedback functions well and the arm motion and load dependence approximates that of a non-locking device with viscous damping. Frequency response is increased by the presence of the clutch. However, this effect is nonlinear and step response is unaffected. Actuator performance is satisfactory, except that efficiency falls off at higher loads.

CHAPTER THREE

RECOMMENDED MODIFICATIONS

a) The Clutch

As has been mentioned, the reverse locking clutch used is a standard unit with torque capacity in excess of the requirement and weighs nearly a pound. Since it is absolutely essential to reduce the device's weight by nearly a pound, this would be a good place to start. This unit is the smallest in the line of reverse locking clutches offered by Formsprag, Inc. Other R-L clutches are available from other manufacturers, with torque ratings down to 35 in.-lb., but with no saving in size or weight, so these need not be considered.

One possibility is to have designed and manufactured a special purpose miniature version of the R-L clutch. This is a relatively expensive solution.

Also, there is the possibility of using an efficient, non locking screw which, in series with the gear reducer and it's attendant dry friction, would behave as though locked with loads under a critical value. This does not seem practical with a ball screw. Non-locking

acme screws with teflon on steel can be from 81-93% efficient, given the right helix angle. However, to achieve this efficiency in an acme screw, helix angles of 35° or more must be incorporated, so this does not seem practical either. Clearly this approach, if it could be made to work, would be the lightest, smallest, and most economical, and therefore it warrants further consideration.

A third alternative is a brake with a solenoid or other actuator which would lock the drive train when the error signal is within the deadband. Since this can be purchased as an optional feature on many motors, cost would not be prohibitive.The braking would take place on the motor end of the gear reducer, so the torque involved is light and the unit may be small and light. However, the power consumption may be prohibitive, and the system would become more complex.

There are no doubt other possibilities not considered here, and the solution will determine how practical the device ultimately will be.

b) Mechanical Impedance Adjustment

It would be advantageous for a number of reasons to keep the motor at nearly constant speed over a wide range of loadings. As prosthetic devices are presently conceived, this is impossible since a higher torque necessitates more current, therefore less back EMF, therefore slower operation. Advantages of a nearly constant speed system would be:

1) greater efficiency (smaller power pack)
2) smaller motor required
3) lower current and power capacity in control circuitry; smaller components
4) less expensive components throughout
5) greater load capacity in the arm
6) longer motor life

A solution to this problem would serve very much the same purpose as an automobile transmission, keeping the engine within it's permissible speed range although vehicle speed may vary by a factor of 100. Because the PM motor cannot operate well over a wide range, three speeds would not suffice, and clearly the transmission must be automatic.

c) Rigid Above Elbow Section

The above elbow section on which the feedback strain gauges are mounted was made very thin in order to achieve the required feedback gain. The structural safety factor is very low there and the low spring rate of the section in bending causes some undesireable dynamics. In subsequent models this section should be made more rigid, which will then necessitate either semiconductor strain gauges, or high gain amplifiers with the wire gauges used here, to achieve the required gain.

d) Redesign of Power Amplifier

There are three basic types of circuit in the controls; a differential amplifier and a $\pm$15 volt power supply, both of which are quite reliable, and a power amplifier, the performance of which is less than ideal. It was designed as a dissipative type but usually operates as a switching amplifier. Sometimes it is dissipative; the mode of operation seems to be related to ambient temperature. Deadband in the first stage causes erratic operation near zero, and the output drifts.

While further development of this amplifier

might be successful, it would be considerably less expensive to begin again on a switching amplifier by intent, and by an experienced circuit designer.

e) Backlash

There is about an inch of backlash at the terminal device. This is due primarily to tolerances in the thrust bearing assembly, screw actuator, and bushings. Our experience has been that extrusion of the Delrin AF bushings isnot a problem, and friction is very low. These seem satisfactory. Greater care should be taken in the design of the thrust bearing assembly and selection of the screw actuator in order to reduce axial tolerances.

f) Limit Switches

It was originally felt that mechanical constraint of the motion of the arm was sufficient in the laboratory model and, under these controlled conditions, limit switches would not be necessary. However, one burned out motor later, it is apparent that limit switches would be a desireable addition to all subsequent models, for laboratory or clinical use.

CHAPTER FOUR

SUMMATION

An electric elbow and associated controls have been designed and built for EMG control. The device performs satisfactorily. Overall weight is slightly over 2 lb., which is more than desireable. Possible areas for miniaturization have been investigated, such as the reverse locking clutch which provides the continuous self locking feature. Minumum flexion time is under 3/4 sec. and maximum elbow torque at stall is 120 in.-lb.

The device is compatible with long upper arm stumps as all drive equipment is located in the forearm section. However, this causes an excessive inertia about the elbow.

The self locking feature, together with force feedback provided by a strain gauge bridge results in no electric power being required to hold a load.

The device is relatively efficient, except when high loads cause the motor to operate in an inefficient range. Power supply is from nickel-cadmium batteries or a plug in DC supply. Low friction elements such as the ball bearing screw actuator are used exclusively in the drive train.

The internal control system provides force feedback from the strain gauge bridge and velocity feedback from the motor back EMF. Force feedback is required to provide the holding action with no power described above. Velocity feedback eliminates jerky motion due to starting friction.

A permanent magnet motor was used as it combines high power in a small package with high efficiency over a reasonable range. This type motor, however, is not ideally suited to high torque outputs near stall and it's life may be shortened considerably.

APPENDICES

APPENDICES

Appendix A

transfer ratios (see fig. 4)

gear reducer

T_2/T_1=18.78 in.-lb./in.-lb.

screw

8 threads/inch

$f_1/T_2=16\pi$ lb./in.-lb. =50.2

lever arm

lever arm varies $\frac{1}{4}$"to $\frac{3}{4}$"

with upper arm vertical, forearm horizontal

lever arm=$\frac{9}{16}$" = avg. lever arm

$T_3/f_1=\frac{9}{16}$ in.-lb./lb.

force at terminal device

forearm length to T.D.=12"

$f_2/T_3=\frac{1}{12}$ lb./in.-lb.

T_1=motor torque

T_2=gear reducer output torque

f_1=tension in screw

T_3=elbow torque

f_2= lifting force at terminal device

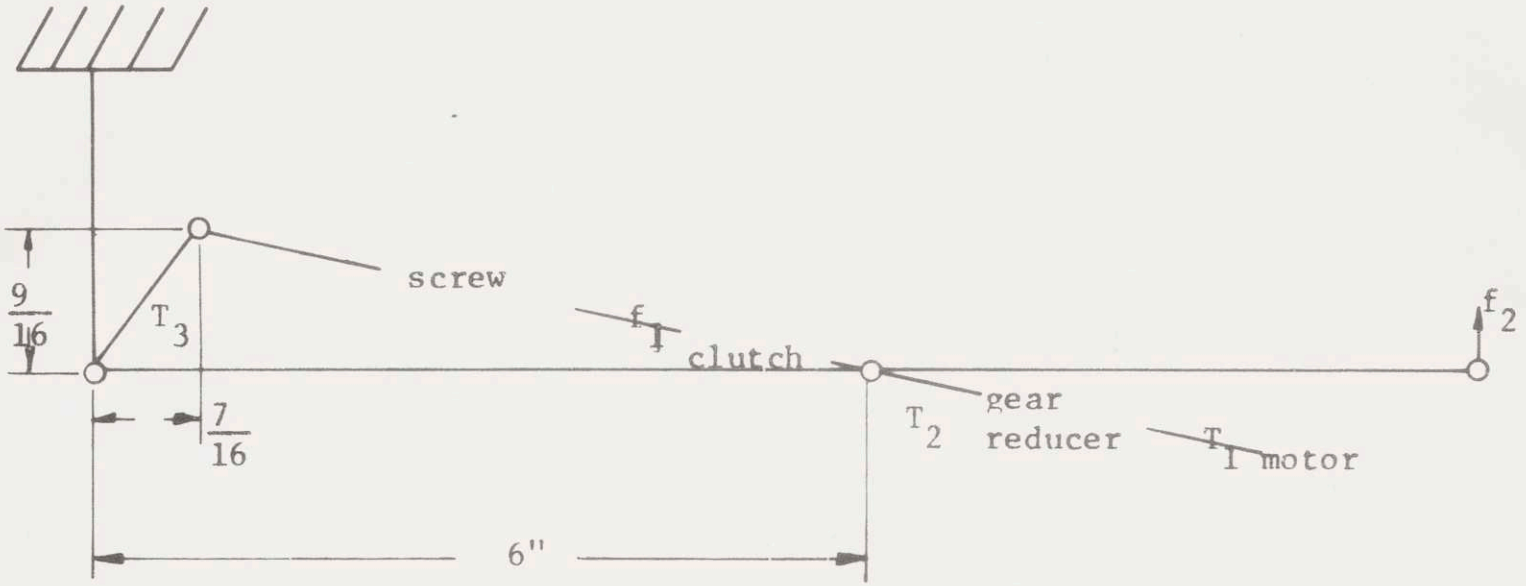

Actuator Linkage

figure 4

overall transfer ratio:

$$\frac{\text{force at T.D.}}{\text{motor torque}} = f_2/T_1=(18.78)(50.2)(\frac{9}{16})(\frac{1}{12})$$

$$f_2/T_1=44 \text{ lb./in-lb.}$$

This static analysis does not include inefficiencies. For details and dynamic analysis, see appendix D.

The mechanical advantage chosen was intended to provide a nearly natural no-load flexion speed, driven by the motor near it's top speed. The torque-force relationship is a by product

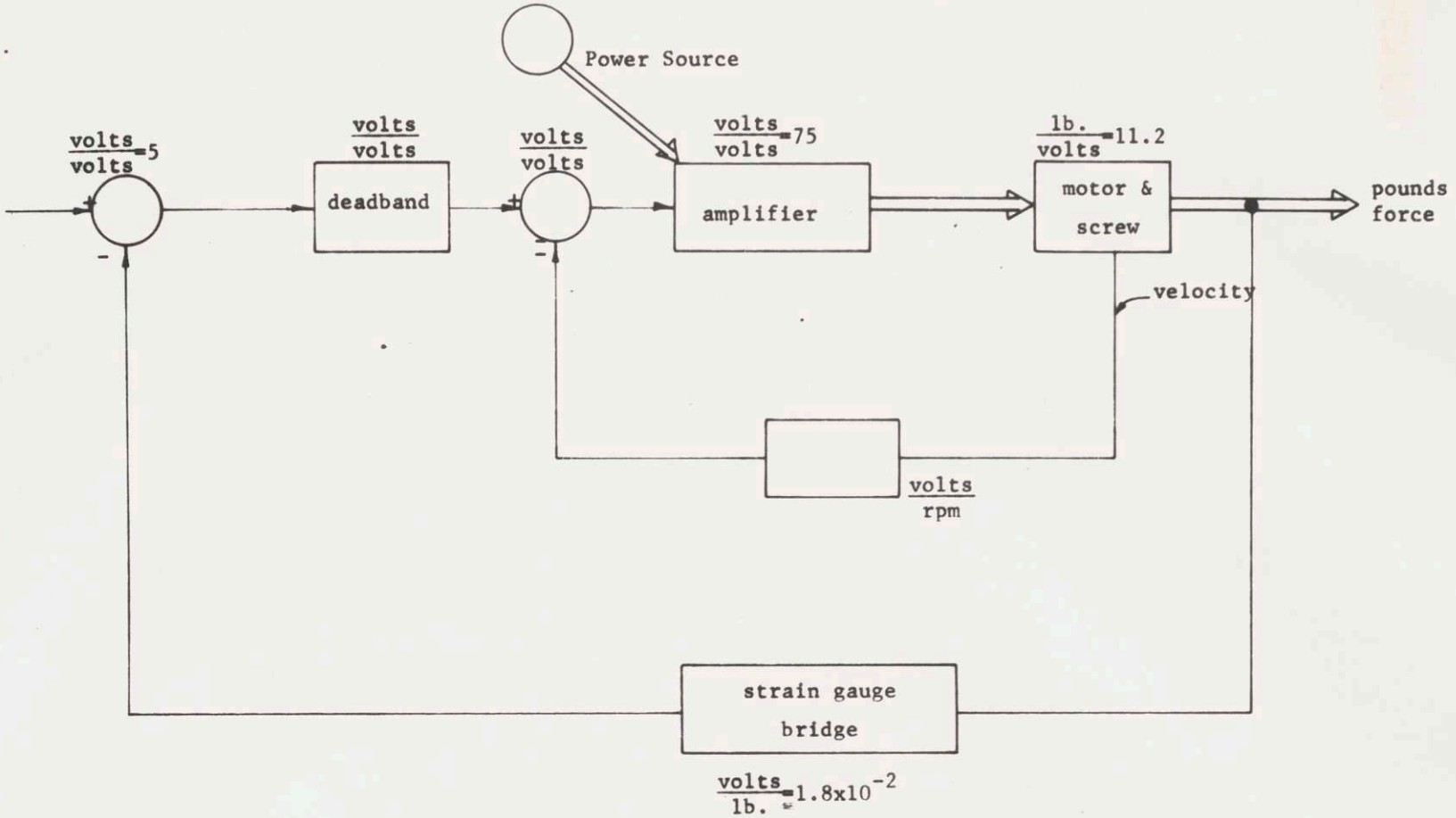

output is axial force in screw
feedback, actually measuring elbow torque,
gives an approximation to this force

figure 5

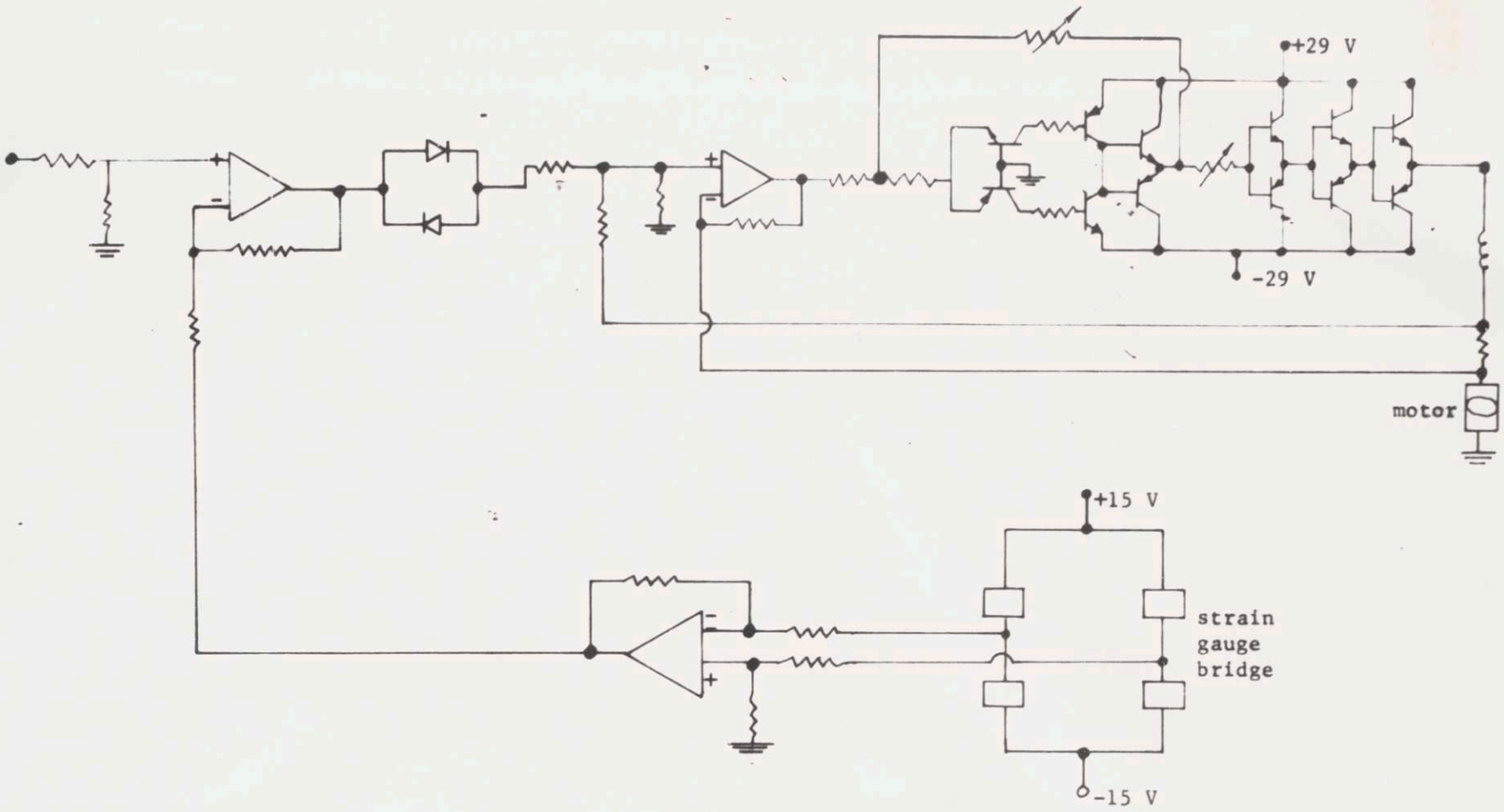

overall system (schematic)

figure 6

Appendix B

Standard Mechanical Parts and their Cost

(1) Globe PM motor type #MM7, open construction, with 18.78:1 planetary reducer; $\frac{3}{16}$" shaft, $\frac{5}{16}$"long with $\frac{1}{16}$" hole drilled through shaft $\frac{1}{16}$" from end

$58.00

(1) Formsprag reverse locking clutch, type #RL-35A/.375

$33.00

(1) Saginaw ball screw & nut, type #0375-0125-B2

$30.00

(4) BLH strain gauges, type #CB-10

$26.40

small parts:

connector, dowel pins, retainer rings, shafts, terminals, screws, nuts, rollpins

$6.00

Materials and their Cost (approximate)

7075-T6, 1" plate, 4 lb.	$8.00
Delrin AF, $\frac{1}{2}$" rod, 1 ft.	$3.00
2024, bar stock, 7 lb.	$7.00
1090 drill rod, 1 lb.	$1.00
Cost of parts fabrication:	$370.00

No estimates are made of electrical equipment costs as the author is certain that competent electrical design would result in better and cheaper equipment.

Appendix C

derivation of force feedback gain

beam bending (rectangular cross section)

$M=S_m t^2 l/6$

$S_m=6M/t^2 l= eE$

$e=6M/Et^2 l$ $\qquad M=fD$

$e=6fD/Et^2 l$

$dR=Re_m\phi$

$$dE_1= \frac{R+dR}{(R+dR)+(R-dR)}E_o$$

$$dE_1= \frac{R+dR}{2R}E_o$$

$dE_1/dR= E_o/2R= dE_1/Re_m\phi$

$$\frac{dE_1}{6\phi fD/Et^2 l} =E_o/2$$

$dE_1/f=g/2=3\phi DE_o/Et^2 l$

$g=6\phi DE_o/Et^2 l$ v./lb.(force)

$$t^2 l= \frac{6M}{S_m} = 6f_m D/S_m$$

$$g = \phi E_o S_m/Ef_m$$

ϕ= gage factor

E_o= voltage across bridge

E_1= $\frac{1}{2}$ bridge output

E= Young's modulus

M=bending moment

f_m=maximum allowable force

S_m=maximum allowable stress

Appendix D

Dynamic Analysis

I_2=moment of inertia of forearm section about it's C.G.=(3.5×10^{-2})lb.-in.-sec.^{2}

m=mass of forearm section=$(5.2\times10^{-3})\frac{\text{lb.-sec.}^2}{\text{in.}}$

l=distance from elbow joint to C.G.=7"

M=load mass (at terminal device)

L=overall length of forearm section=12"

c=viscous friction in arm=(.01) in.-lb.-sec.

ϕ=angular motion of arm

T_2=torque about elbow

d=viscous friction of load

k=mechanical transformer ratio T_2/T_1=28.2

T_1=torque on ball screw

θ=ball screw position(angular)

$k_2=\frac{\text{torque}}{\text{volts}}$ of motor in series with 2 ohm resistor=.22

E=applied voltage

J=moment of inertia of clutch & screw=(7×10^{-6})lb.-in.-sec.^{2}

r=gear ratio=18.8:1

I_1=armature moment of inertia=(3.3×10^{-6})lb.-in.-sec.^{2}

b=drivetrain damping(back EMF & friction)=(4.8×10^{-2})lb.-in.-sec.

k_3=mechanical transformer ratio $\frac{\text{force}}{\text{torque}}$ for ball screw

=50.2 lb./in.-lb.

f=force on ball screw

Nonlinearity due to saturation is neglected except in limit cycle evaluation. Gravity is neglected as a constant bias for small motions.

the equation of motion of the arm is:

$$(I_2+ml^2+ML^2)\ddot{\phi} + (c+d)\dot{\phi} + k\phi = T_2 \qquad (1)$$

looking at this relationship from the drive train instead of the arm:

$$(I_2+ml^2+ML^2)\ddot{\theta} + (c+d)\dot{\theta} + k\theta = T_1 k_1^2 \qquad (2)$$

the equation relating torque to applied voltage is:

$$T_1 = k_2 E - (J+r^2 I_1)\ddot{\theta} = b\dot{\theta} \qquad (3)$$

rearranging (2):

$$\theta = \frac{k_1^2 T_1}{(I_2+ml^2+ML^2)s^2+(c+d)s+k} \qquad (4)$$

combining (3) & (4):

$$T_1 = k_2 E - k_1^2 T_1 \left[\frac{(J+r^2 I_1)s^2+bs}{(I_2+ml^2+ML^2)s^2+(c+d)s+k}\right] \qquad (5)$$

rearranging (5) and substituting $f=k_3 T_1$:

$$\frac{f}{E} = k_2 k_3 \left[\frac{(I_2+ml^2+ML^2)s^2+(c+d)s+k}{(I_2+ml^2+ML^2+k_1^2 J+k_1^2 r^2 I_1)s^2+(c+d+k_1 b)s+k}\right]$$

incorporating this relation in the overall system:

A=electrical forward loop gain=360 volt/volt

$\frac{f}{E}$=mechanical forward loop gain= C/D

B=feedback gain=(1.8×10^{-2}) volts/lb.

$$H=\frac{AC}{D+ABC}$$

$$H=\frac{(360)\left[(I_2+ml^2+ML^2)s^2+(c+d)s+k\right]k_2k_3}{(I_2+ml^2+ML^2+k_1^2J+k_1^2r^2I_1)s^2+(c+d+k_1b)s+k+(360)(1.8\times10^{-2})k_2k_3\left[(I_2+ml^2+ML^2)s^2+(c+d)+k\right]}$$

Nyquist plots of this transfer function are presented for no load and for k=100 lb./in., the approximate spring rate of a normal hand. In both cases M=2 lb.(weight).See figures 7 & 8.

Since the nonlinearity is amnesic, the function $-\frac{1}{K_{eq}}$ (K_{eq}=equivalent gain of the nonlinearity) lies along the negative real axis of the plot and cannot intersect with the linear Nyquist characteristic. Therefore there is no limit cycle.

Care should be taken in the design of control circuitry to keep phase shift to a minimum, as excessive phase shift could cause a limit cycle.

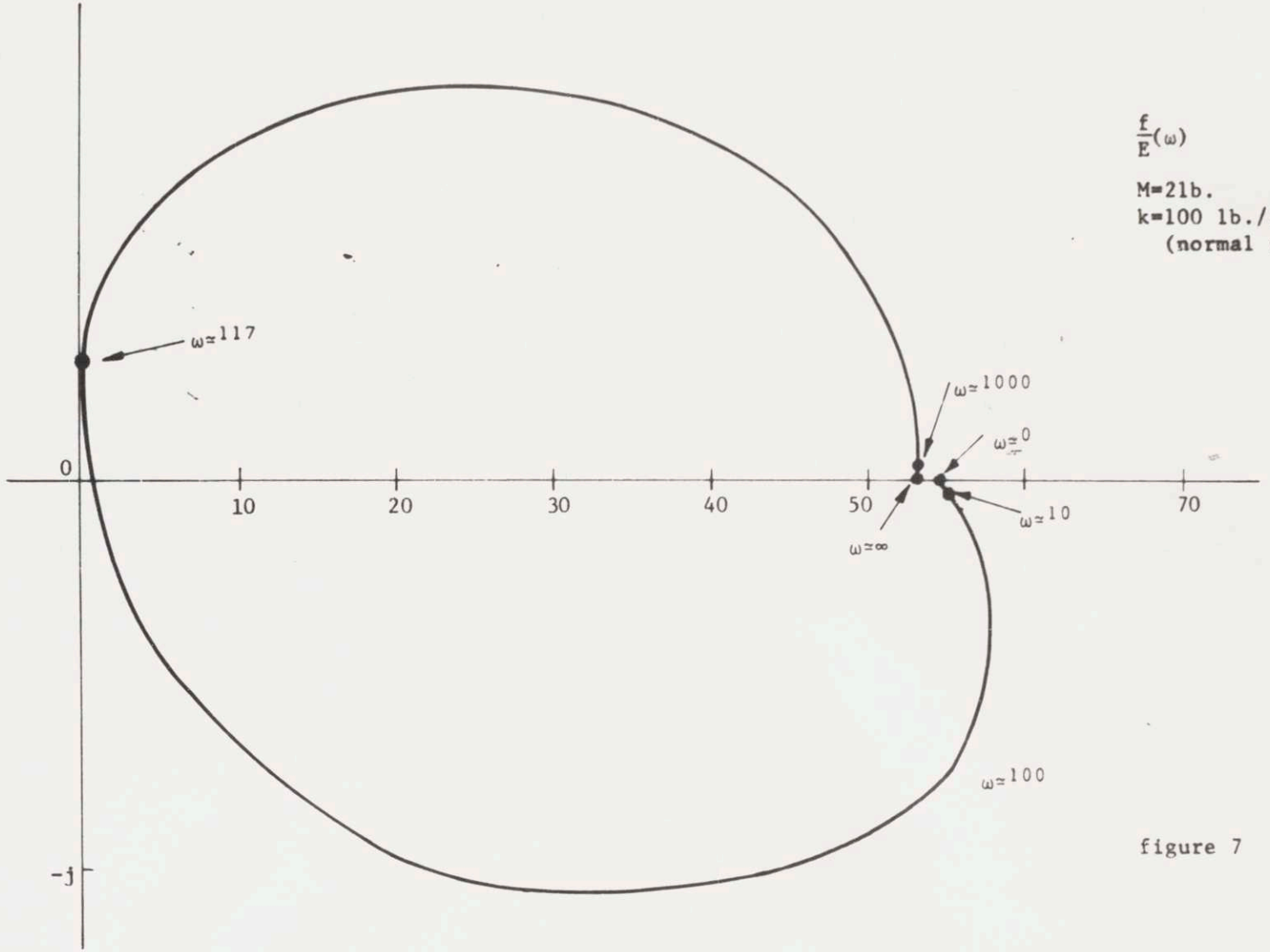
$\frac{f}{E}(\omega)$
M=21b.
k=100 lb./in
(normal skin)
ω≃117
ω≃1000
ω≃0
ω≃10
ω≃∞
ω≃100
0
10
20
30
40
50
70
-j

figure 7

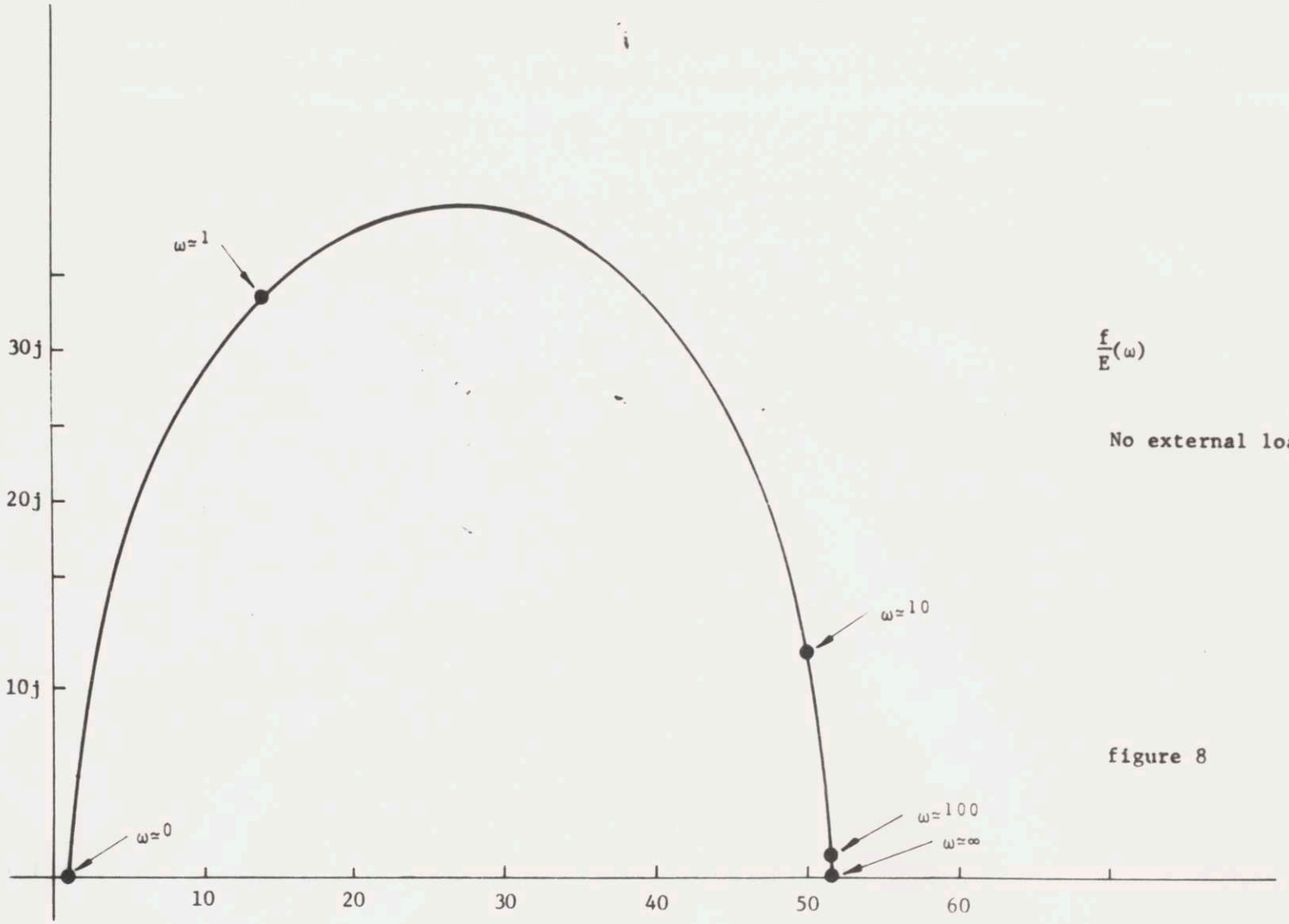

$\frac{f}{E}(\omega)$

No external load

figure 8

Appendix E

BY Rothschild DATE 9 Nov 64 SUBJECT UPPER ARM SECTION SHEET NO. 1 OF 1

CHKD. BY DATE JOB NO. 20068-1

DSR 9678

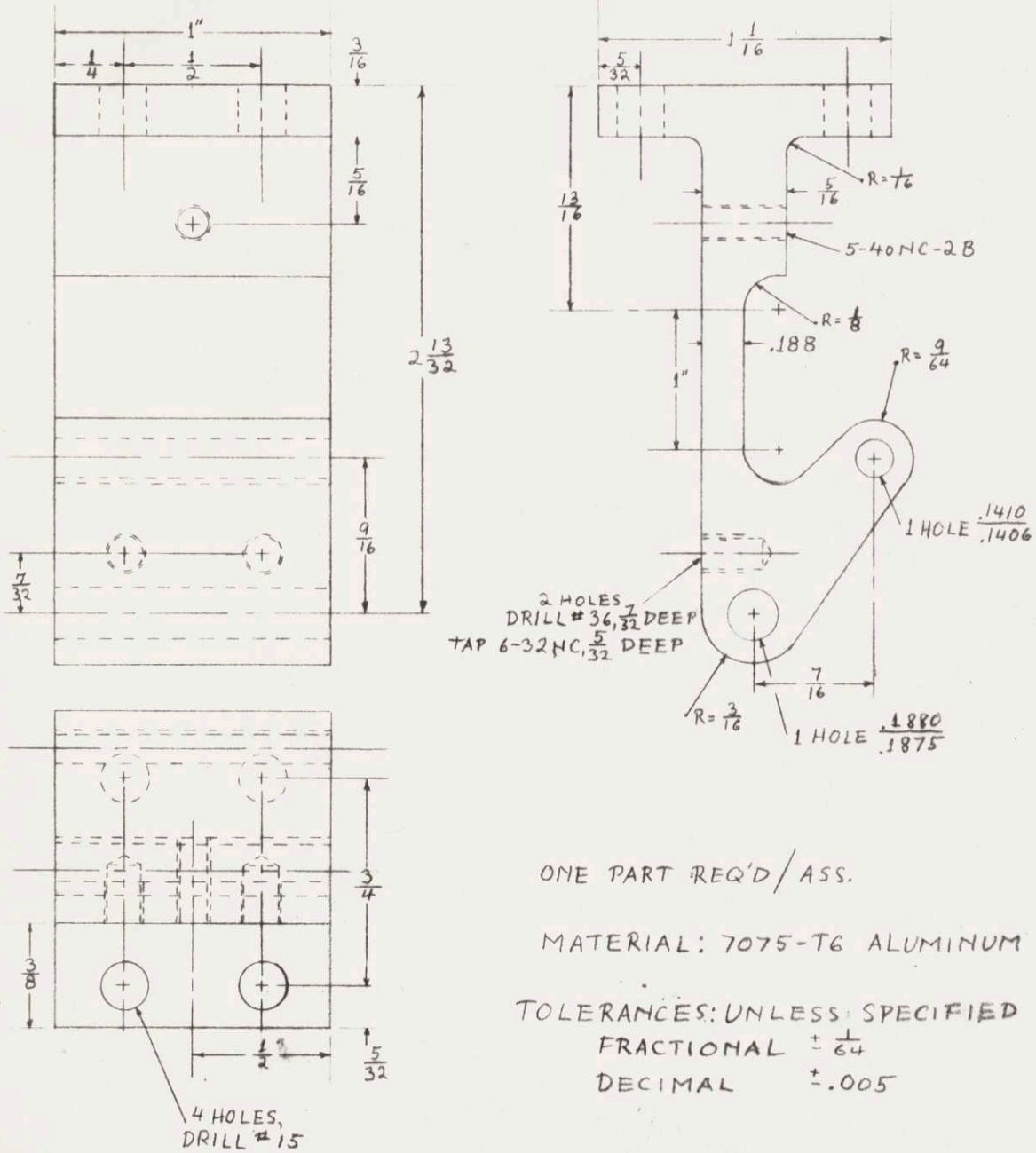

ONE PART REQ'D/ASS.

MATERIAL: 7075-T6 ALUMINUM

TOLERANCES: UNLESS SPECIFIED
FRACTIONAL ± 1/64
DECIMAL ± .005

BY Rothschild DATE 9 Nov 64 SUBJECT elbow pin SHEET NO. 1 OF 1

CHKD. BY [illegible] DATE JOB NO. 20068-2

DSre 9678

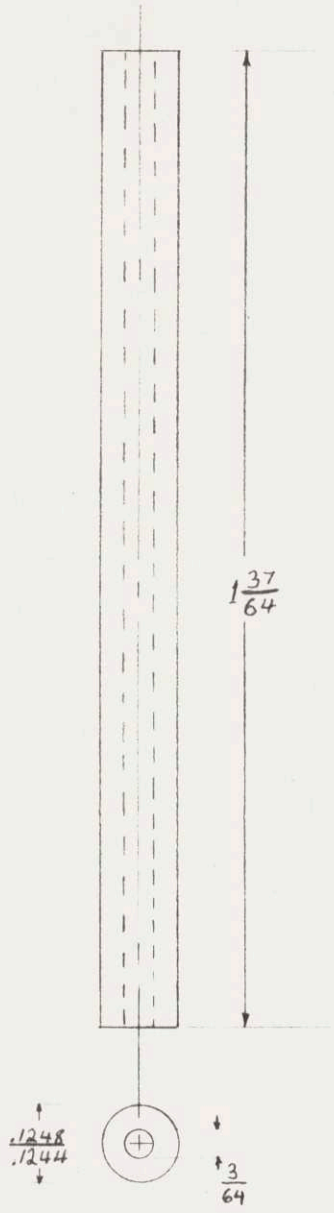

ONE REQ'D/ASS.

MATERIAL: 1090 DRILL ROD

FRACTIONAL TOLERANCES $\pm\frac{1}{64}$

BY ROTHSCHILD DATE 9 NOV 64 SUBJECT ELBOW PIN BEARING SHEET NO. 1 OF 1

CHKD. BY DATE JOB NO. 20068-3

DSR 9678

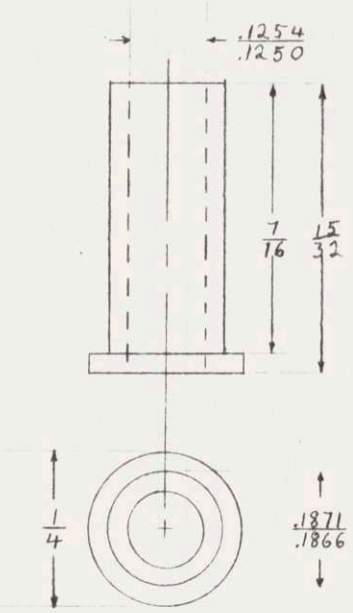

2 REQ'D / ASS.

MATERIAL: DELRIN A-F

FRACTIONAL TOLERANCES ±1/64

BY ROTHCHILD DATE 9 NOV 64 SUBJECT UPPER ARM PIN SHEET NO. 1 OF 1

CHKD. BY [illegible] DATE JOB NO. 20068-4

DSR 9678

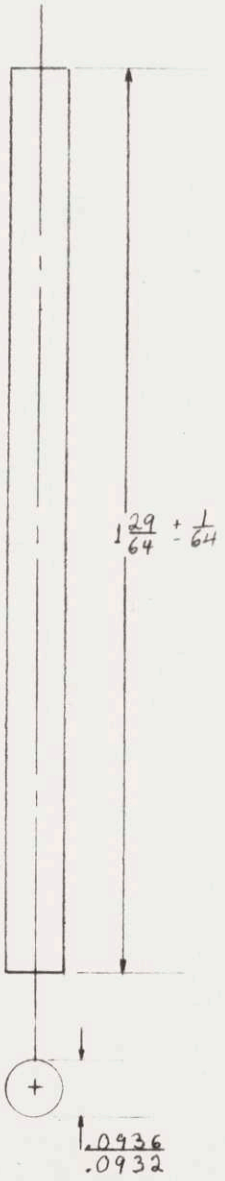

ONE REQ'D./ASS.

MATERIAL: 1090 DRILL ROD

BY ROTHCHILD DATE 10 Nov 64 SUBJECT UPPER ARM BEARING SHEET NO. 1 OF 1

CHKD. BY RR DATE JOB NO. 20068-5

DSR 9678

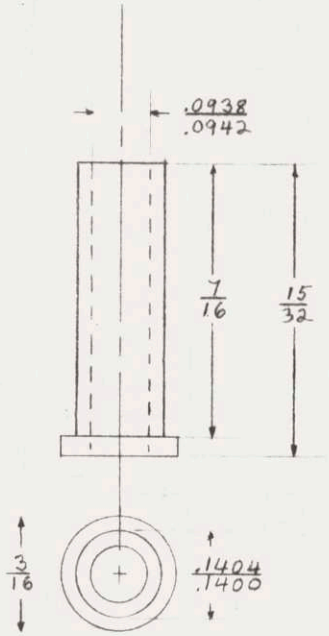

TWO REQ'D./ASS.

MATERIAL: DELRIN AF

FRACTIONAL TOLERANCES $\pm \frac{1}{64}$

BY ROTHSCHILD DATE 16 Nov 64 SUBJECT BALL NUT MOUNT SHEET NO. 1 OF 1

CHKD. BY _____ DATE _____ JOB NO. 20068-6

D.C. 96718

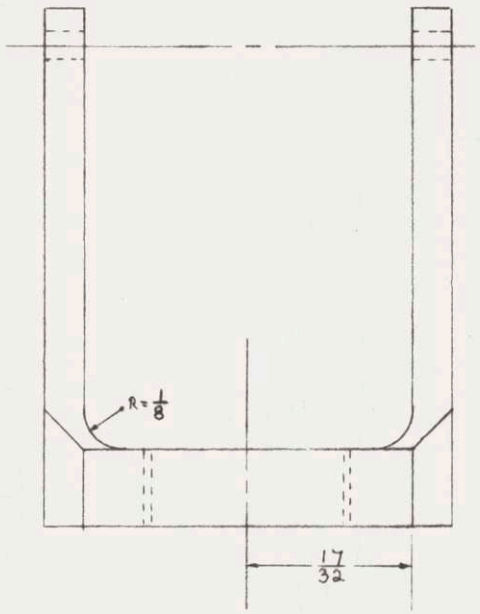

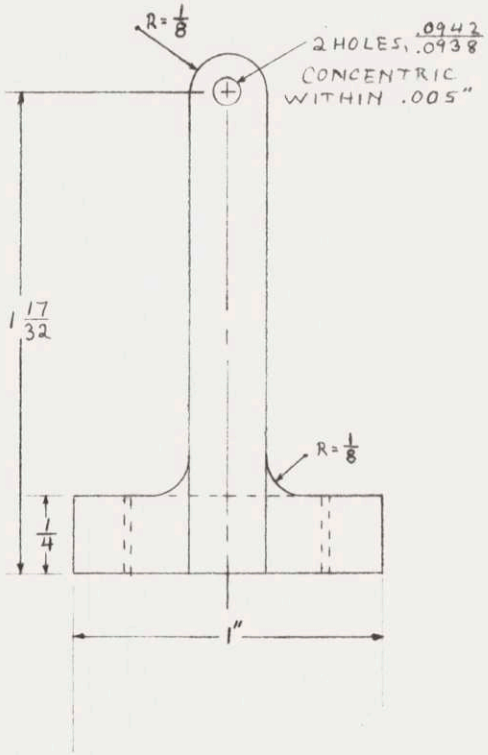

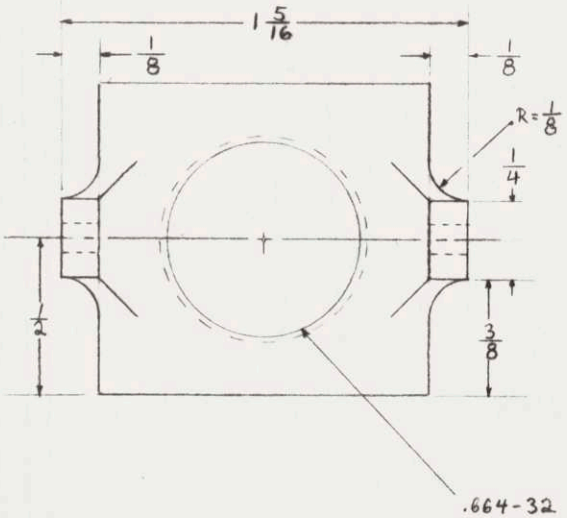

ONE REQ'D./ASS.

MATERIAL: ALLOY ALUMINUM

FRACTIONAL TOLERANCE ± 1/64

BY ROTHCHILD DATE 11 NOV 69 SUBJECT FOREARM STRUT SHEET NO. 1 OF 1
CHKD. BY ____ DATE ____ JOB NO. 20068-7
DSR 9628

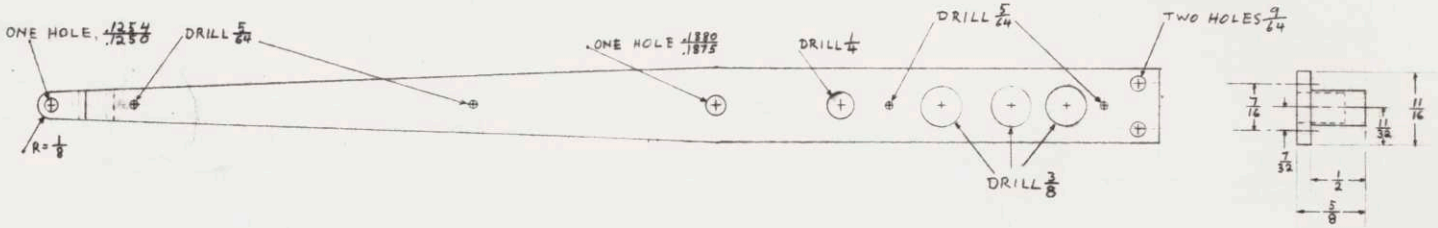

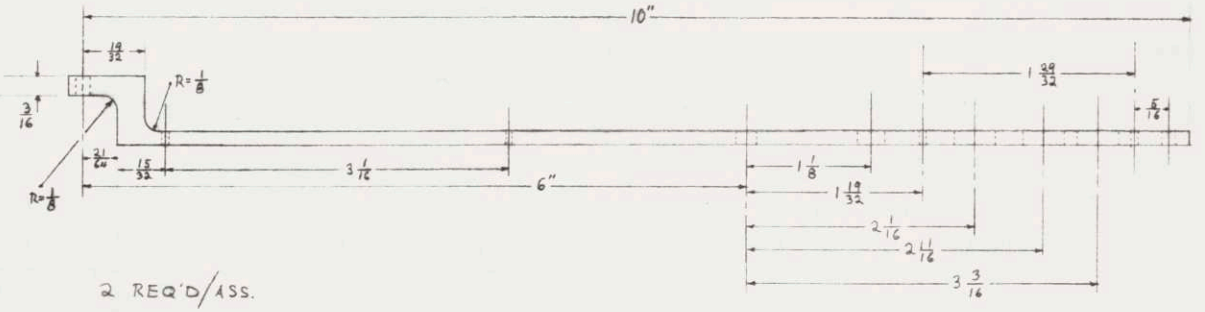

2 REQ'D/ASS.

MATERIAL: 7075-T6 ALUMINUM

FRACTIONAL TOLERANCES ± 1/64

BY ROTHCHILD DATE 11 NOV 64 SUBJECT CLUTCH ADAPTER SHEET NO. 1 OF 2
CHKD. BY ____ DATE ____ JOB NO. 20068-8
DS 15 4678

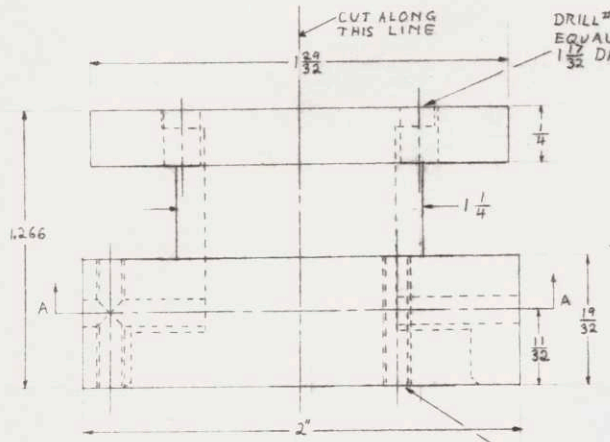

DRILL #16, FOUR HOLES EQUALLY SPACED ON 1 17/32 DIA. B.C.

5-44 NF. THREE HOLES EQUALLY SPACED ON 1 3/4 DIA. B.C.

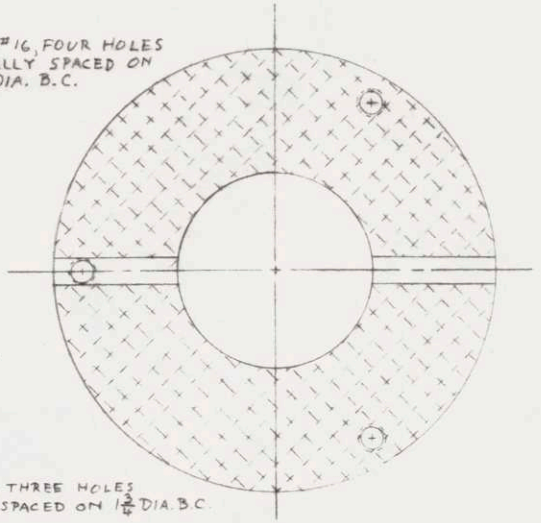

SECTION A-A

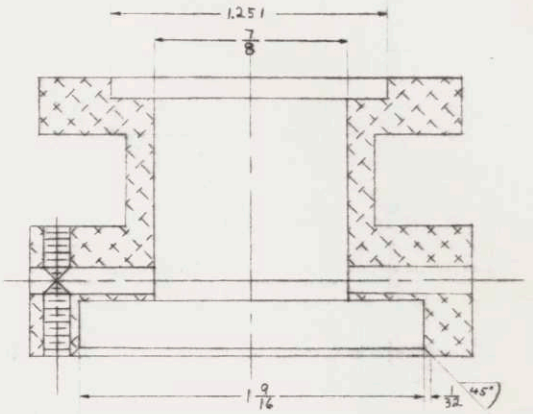

SECTION B-B

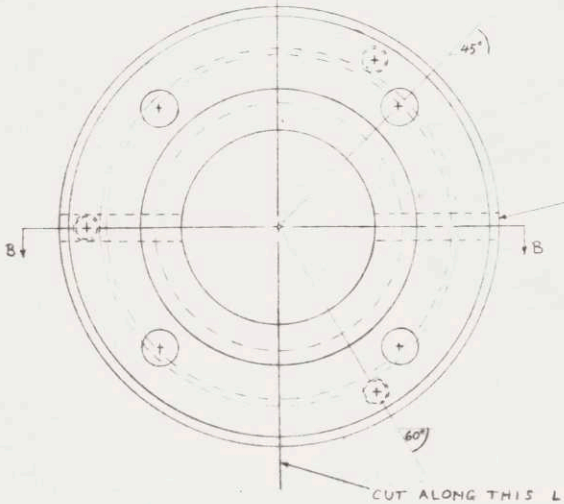

DRILL 7/64, 2 HOLES CONCENTRIC TO ±.005

CUT ALONG THIS LINE

ONE (PAIR) REQ'D./ASS.

MATERIAL: ALLOY ALUMINUM

TOLERANCES:
FRACTIONAL DIMENSIONS ± 1/64
DECIMAL DIMENSIONS ± .001
ANGLES ± 2°

BY ROTHCHILD DATE 11 NOV 64 SUBJECT CLUTCH ADAPTER SHEET NO. 2 OF 2

CHKD. BY _____ DATE _____ (CONCEPTUAL SKETCH) JOB NO. 20068-9

DSR 9628

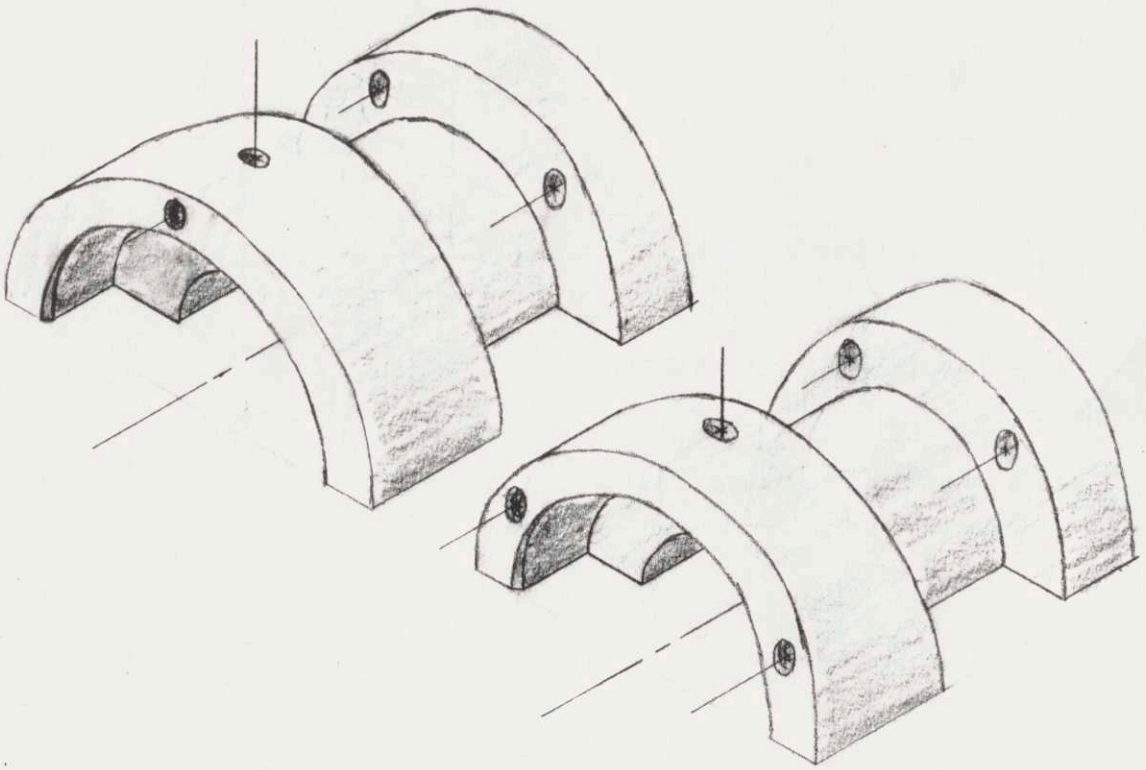

BY ROTHCHILD DATE 11 NOV 64 SUBJECT FOREARM PIN BEARING SHEET NO. 1 OF 1

CHKD. BY _____ DATE _____ JOB NO. 20068-10

D3R 9608

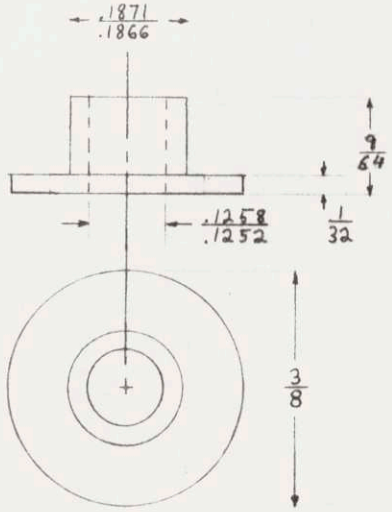

2 REQ'D. / ASS.

MATERIAL: DELRIN AF

FRACTIONAL TOLERANCES ± 1/64

BY ROTHCHILD DATE 12 NOV 64 SUBJECT THRUST BEARING HOUSING SHEET NO. 1 OF 1
CHKD. BY _____ DATE _____ JOB NO. 20068-12
DSR 9628

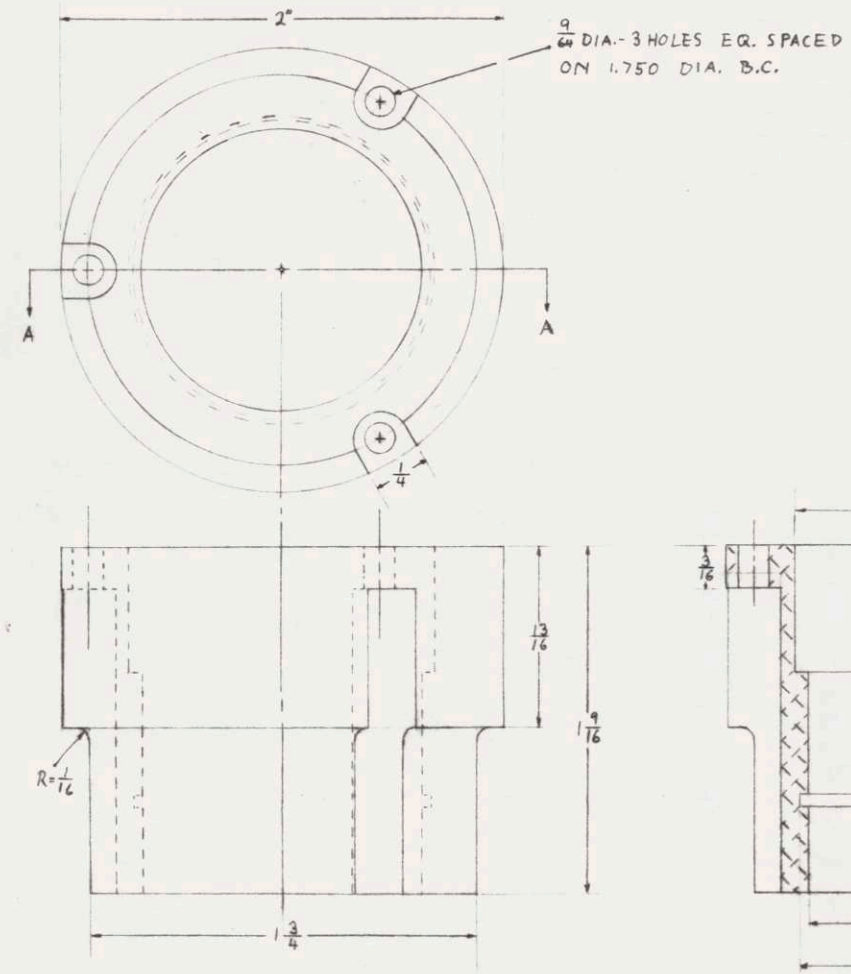

ONE REQ'D./ASS.

MATERIAL: ALLOY ALUMINUM

TOLERANCES (UNLESS SPECIFIED):
FRACTIONAL DIMENSIONS ± 1/64
DECIMAL DIMENSIONS ± .004

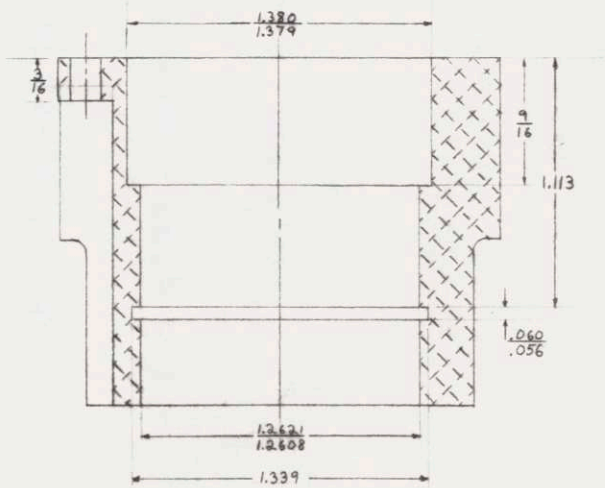

BY ROTHSCHILD DATE 2 NOV 64 SUBJECT FOREARM THRUST WASHER SHEET NO. 1 OF 1

CHKD. BY ____ DATE ____ JOB NO. 20068-13 DSR 9698

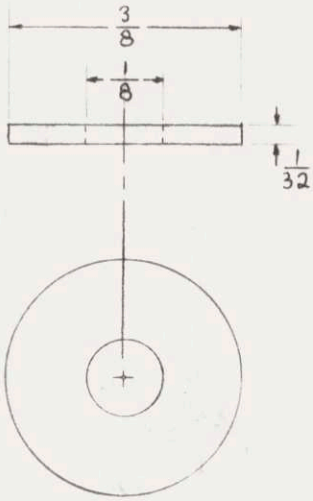

TWO REQ'D./ASS.

MATERIAL: DELRIN AF

TOLERANCES: ± 1/64

BY ROTHCHILD DATE 3NOV64 SUBJECT MOTOR MOUNT RING SHEET NO. 1 OF 1

CHKD. BY _____ DATE _____ JOB NO. 20068-14

DSR 9678

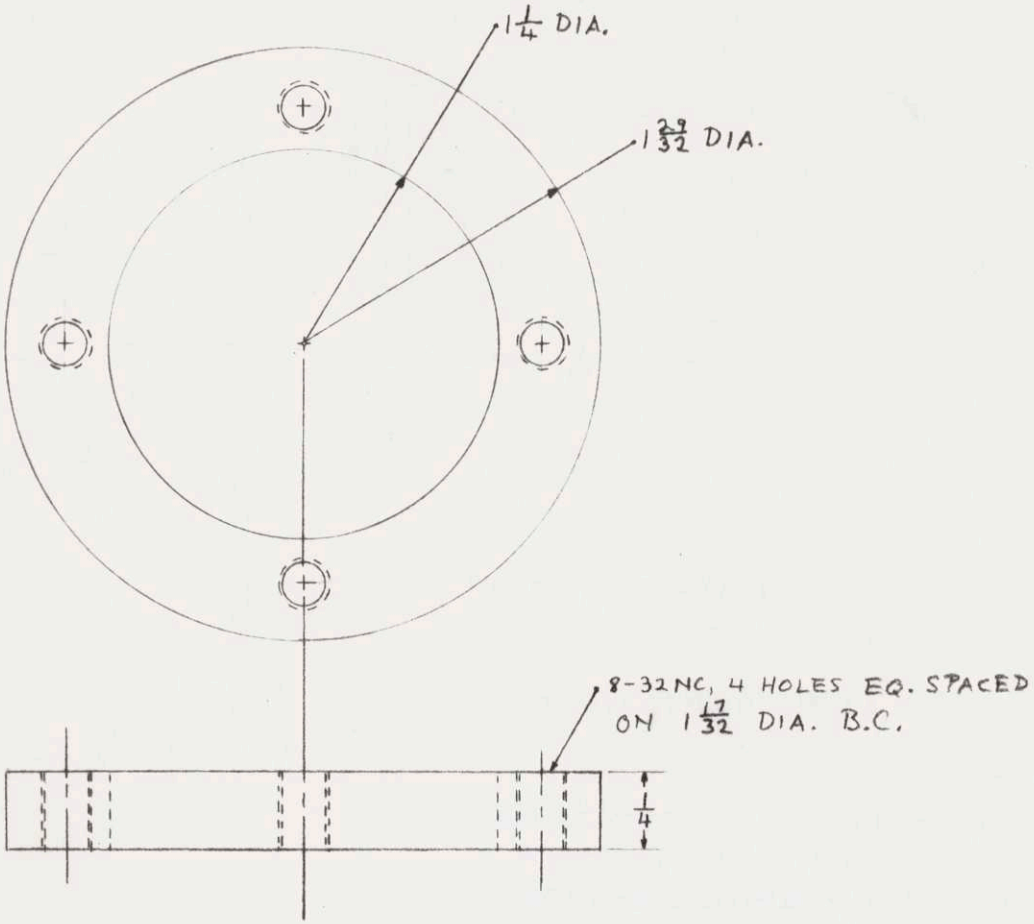

ONE REQ'D./ASS.

MATERIAL: ALUMINUM

TOLERANCES: ± 1/64

BY ROTHSCHILD DATE 12 NOV 64 SUBJECT BALL SCREW CLAMP SHEET NO. 1 OF 1

CHKD. BY ____ DATE ____ JOB NO. 20068-15

DSR 9698

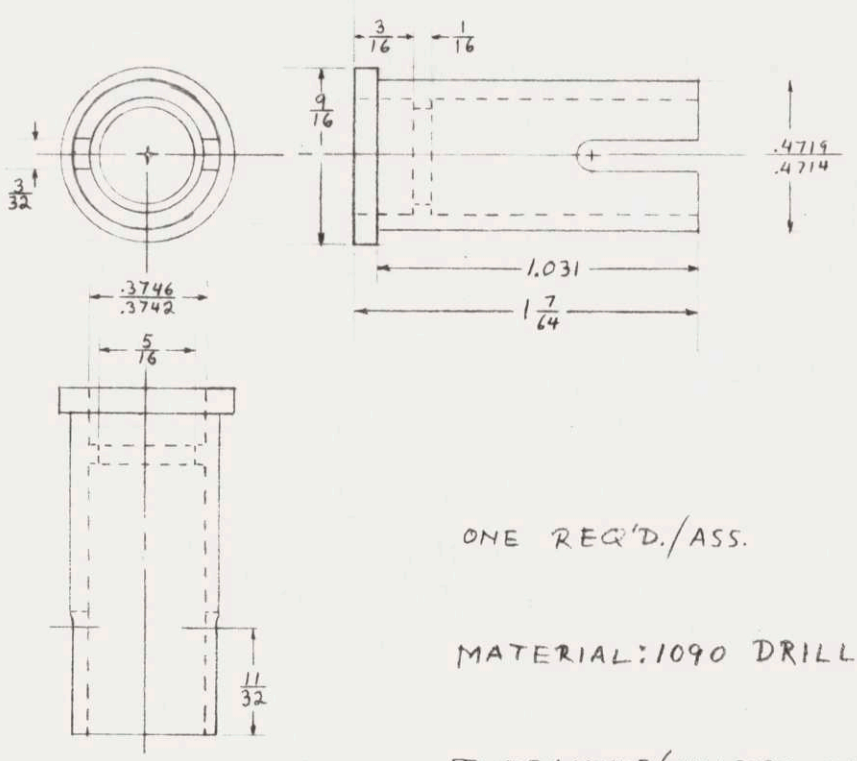

ONE REQ'D./ASS.

MATERIAL: 1090 DRILL ROD

TOLERANCES (UNLESS SPECIFIED):
FRACTIONAL DIMENSIONS ± 1/64
DECIMAL DIMENSIONS ± .005

BY ROTHCHILD DATE 18 NOV 64 SUBJECT WRIST MOUNT SHEET NO. 1 OF 1

CHKD. BY _____ DATE _____ JOB NO. 20068-23

DSR 9628

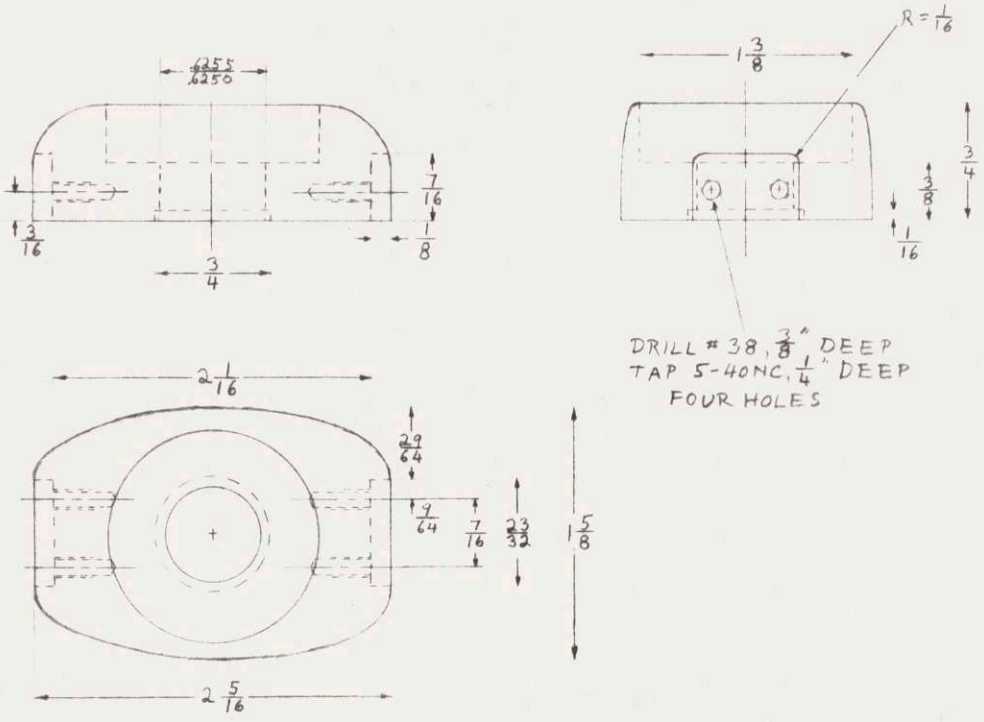

ONE REQ'D./ASS.

MATERIAL: ALUMINUM

TOLERANCES (UNLESS SPECIFIED) $\pm \frac{1}{64}$"

BY ROTHSCHILD DATE 18 NOV 64 SUBJECT WRIST SOCKET SHEET NO. 1 OF 1

CHKD. BY ____ DATE ____ JOB NO. 20068-24

DSR 9678

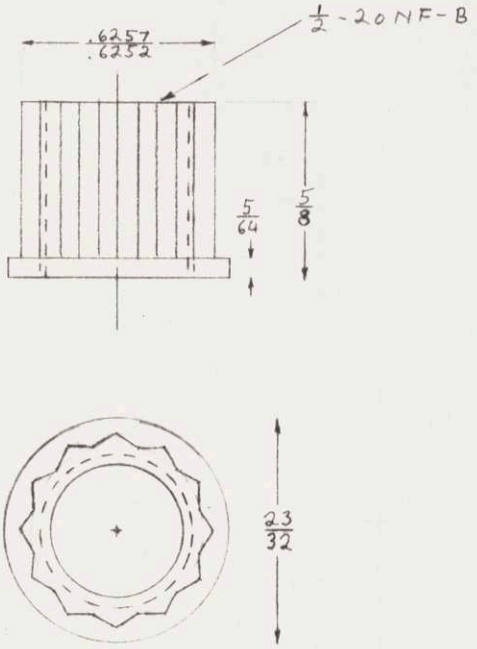

ONE REQ'D./ASS.

MATERIAL: 1090 DRILL ROD

TOLERANCES (UNLESS SPECIFIED) ± 1/64

BY ROTHCHILD DATE 30 NOV 64 SUBJECT MODIFIED R-L CLUTCH SHEET NO. 1 OF 1

CHKD. BY _____ DATE _____ JOB NO. 20068-32 DSR 9678

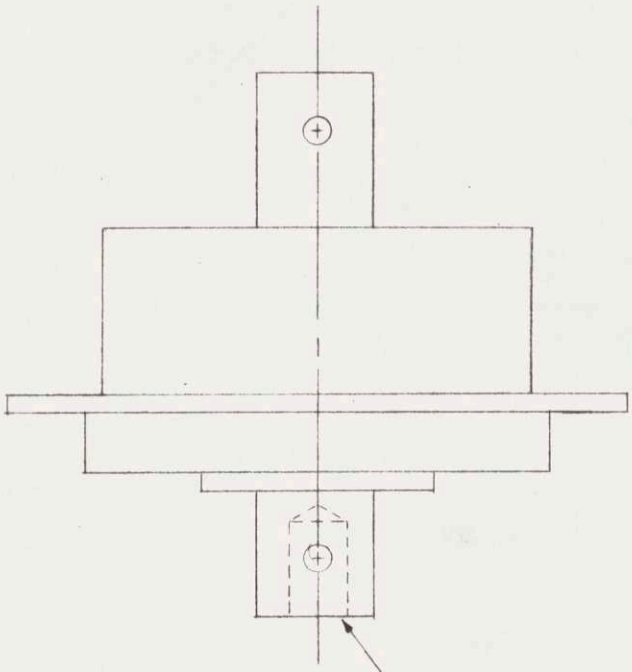

DRILL $\frac{3}{16}$, $\frac{5}{16}$ DEEP ($\pm\frac{1}{64}$) CONCENTRIC TO ±.002

ONE REQ'D./ASS.

BY ROTHCHILD DATE 11 Dec 64 SUBJECT SPRAG CLUTCH SHIM SHEET NO. 1 OF 1

CHKD. BY _____ DATE _____ JOB NO. 20068-33

DSP 4628

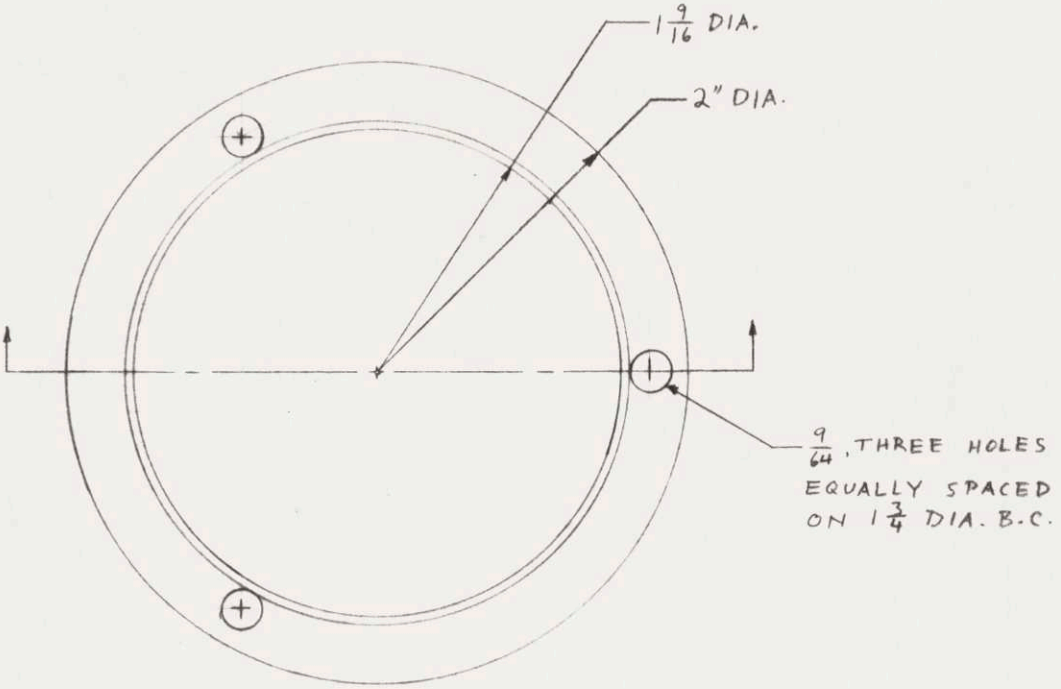

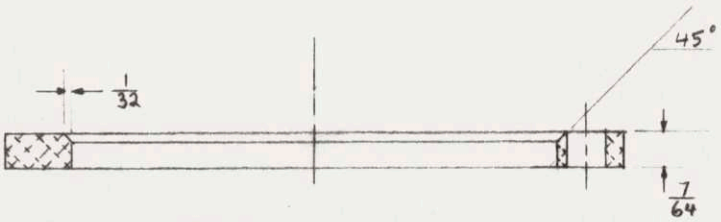

SEC. A-A

ONE REQUIRED

MATERIAL: ALUMINUM

TOLERANCES: ± 1/64

BY ROTHSCHILD DATE 3/2/64 SUBJECT CONNECTOR BRACKET SHEET NO. 1 OF 1

CHKD. BY _____ DATE _____ JOB NO. 20068-39

DSR 9678

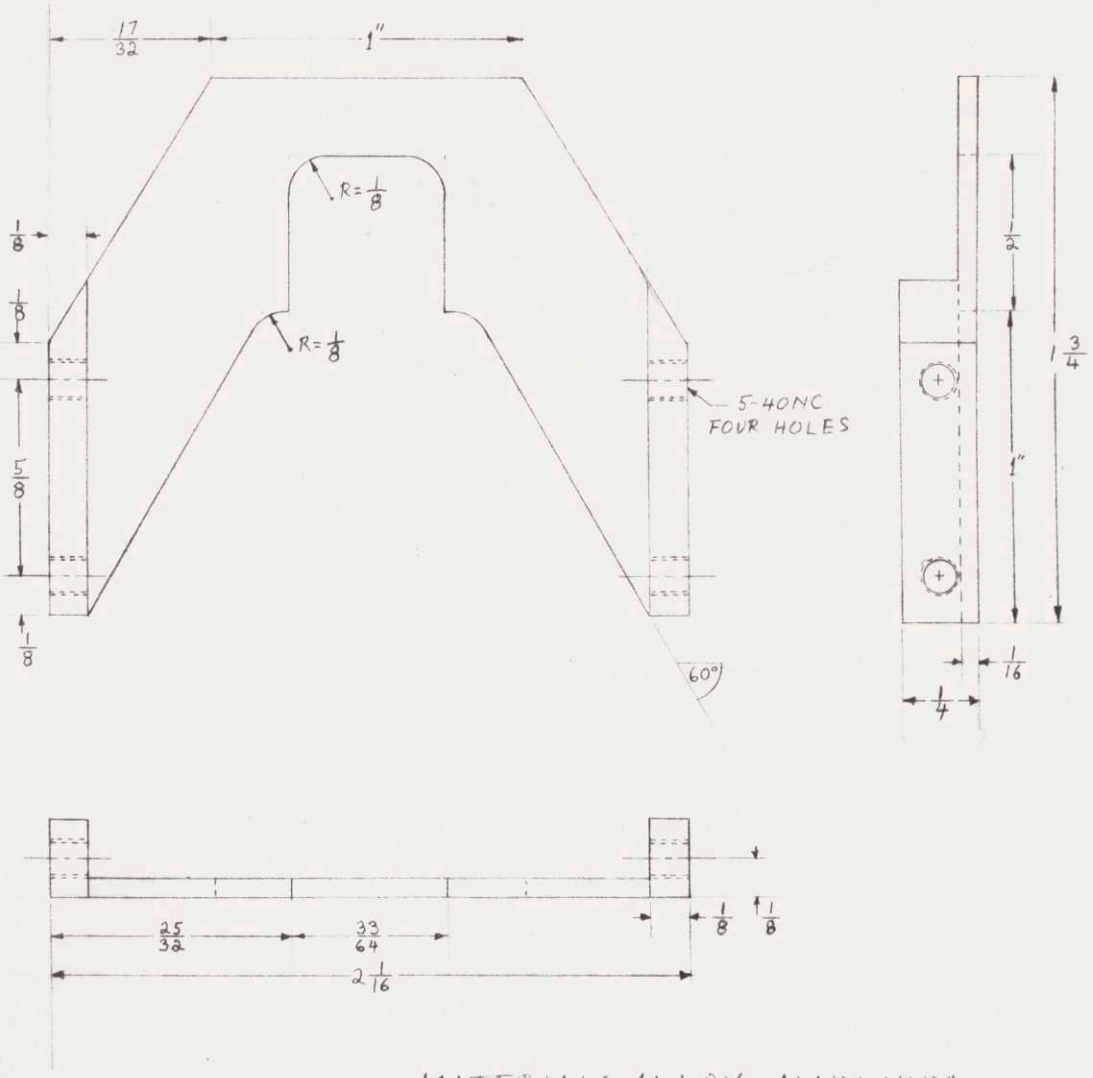

MATERIAL: ALLOY ALUMINUM

ONE REQ'D./ASS.

TOLERANCES ± 1/64

BY ROTHSCHILD DATE 30/12/64 SUBJECT CONNECTOR CLAMP SHEET NO. 1 OF 1

CHKD. BY _____ DATE _____ JOB NO. 20068-4R

DSR 9628

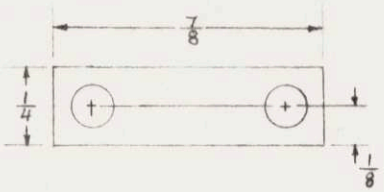

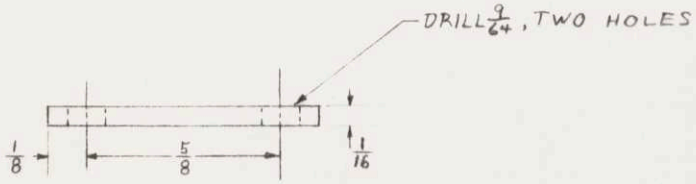

MATERIAL: STEEL

TWO REQ'D./ASS.

TOLERANCES ± 1/64

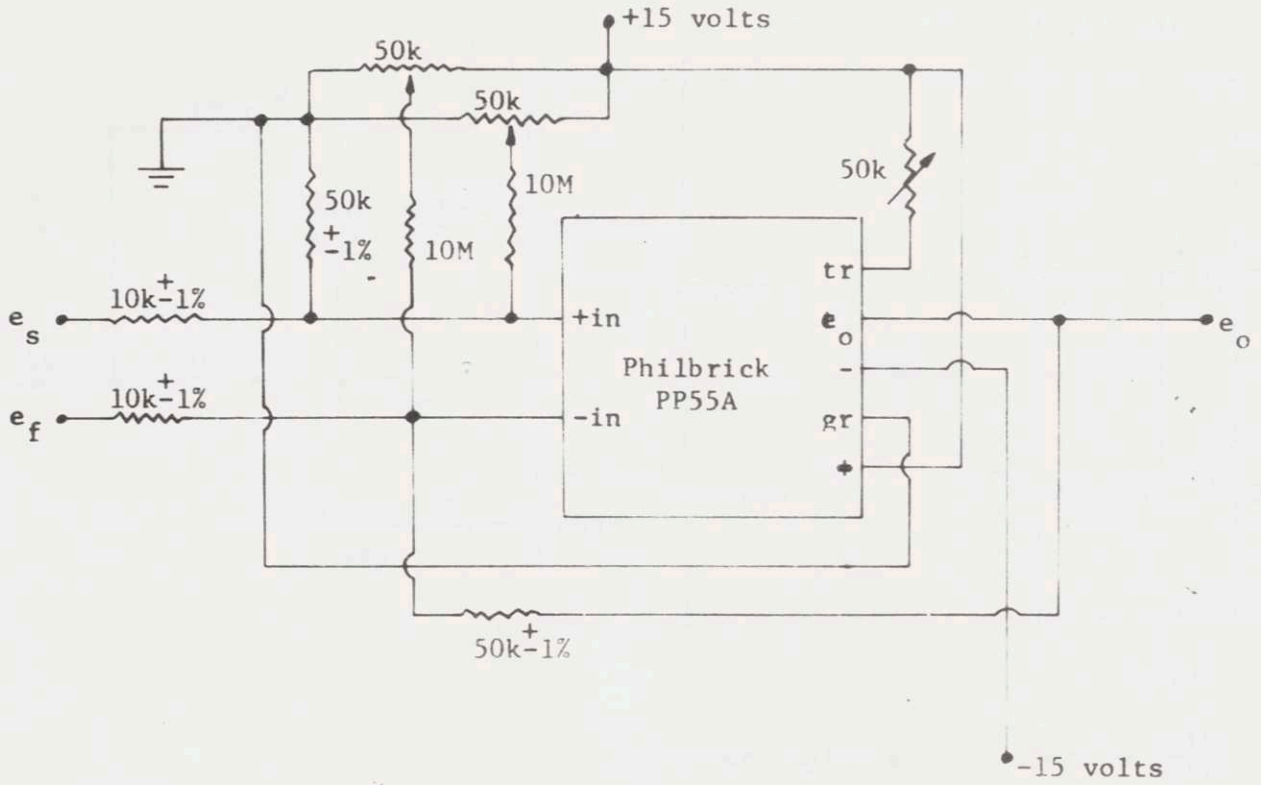

Differential Amplifier

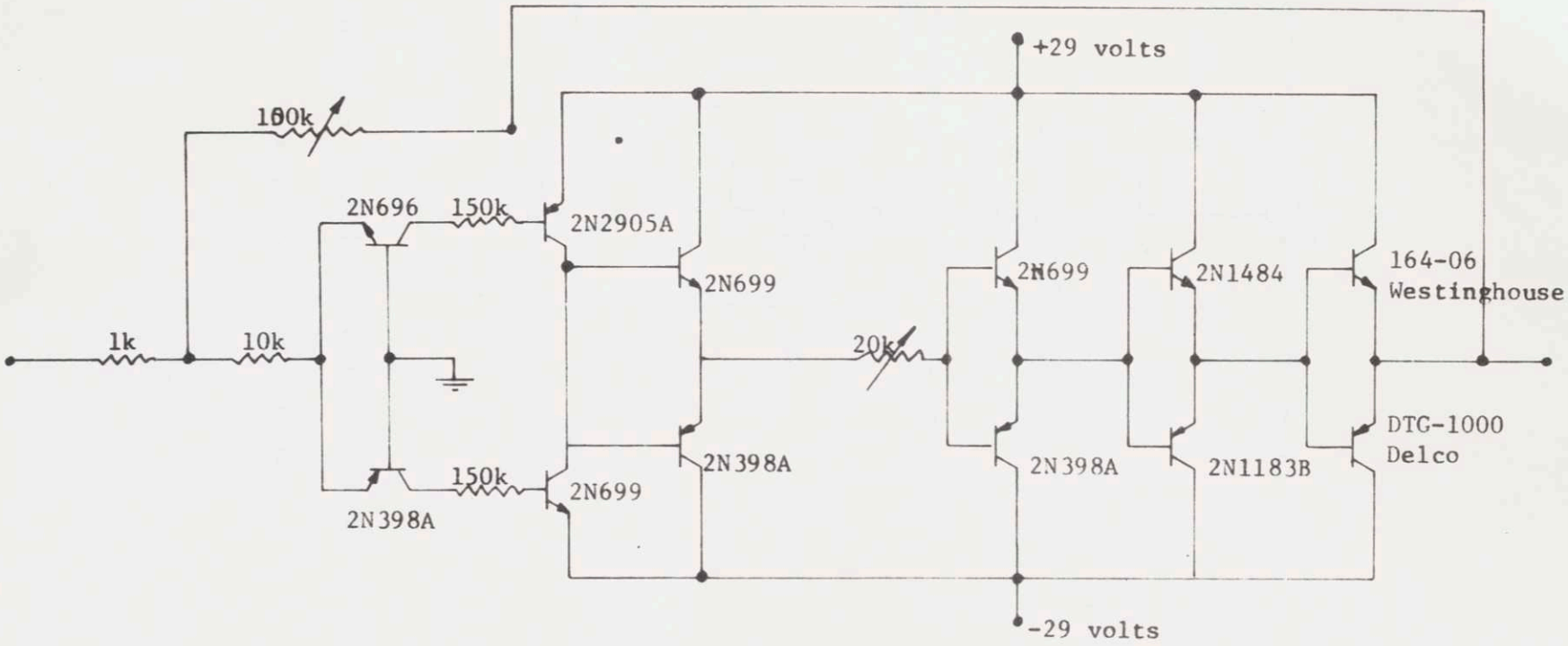

Power Amplifier gain=75 $\frac{\text{volts}}{\text{volts}}$

current output 8 amps (max.)

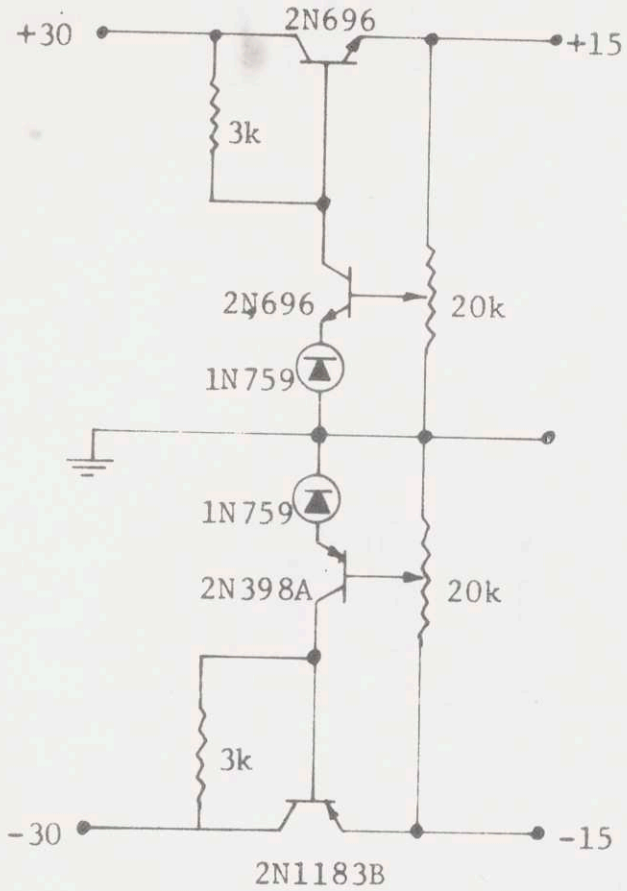

Strain gauge and differential amplifier power supply

current output 50 ma.

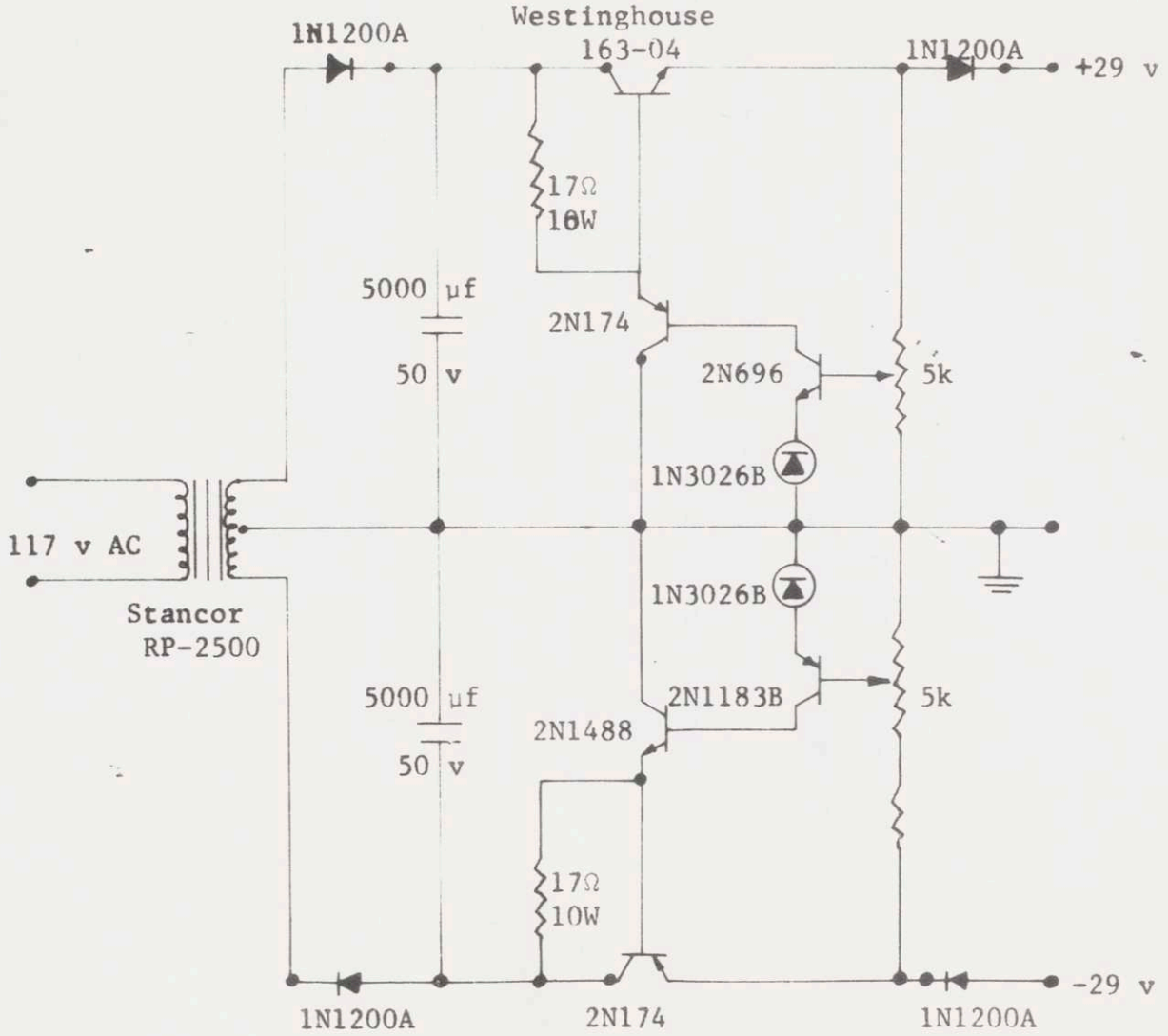

Power supply and battery charger

(not intended to be portable)

8 amps max.

Appendix F

Relevant CPRD-NAS criteria

(A) 12 volt electrical systems should be standard.

(B) The maximum weight of the power pack should not exceed 2 to 2½ lb.

(N) A powered elbow should have a continuous lock and a minimum active torque of 100 in.-lb.

(O) It was desireable but not essential for the elbow to have a free swinging capability.

(P) The elbow's range of flexion should be from 10° to 135°.

(Q) The elbow's flexion speed with no load, from maximum extension to maximum flexion, should not be more than 2 seconds.

(R) The elbow should have a holding torque of 600 in.-lb. at 90° flexion of the elbow, unless the device is capable of withstanding 1500 in.-lb. of destructive torque.

(AB) The device should not weigh more than 60% of the limb it replaces.

Appendix G

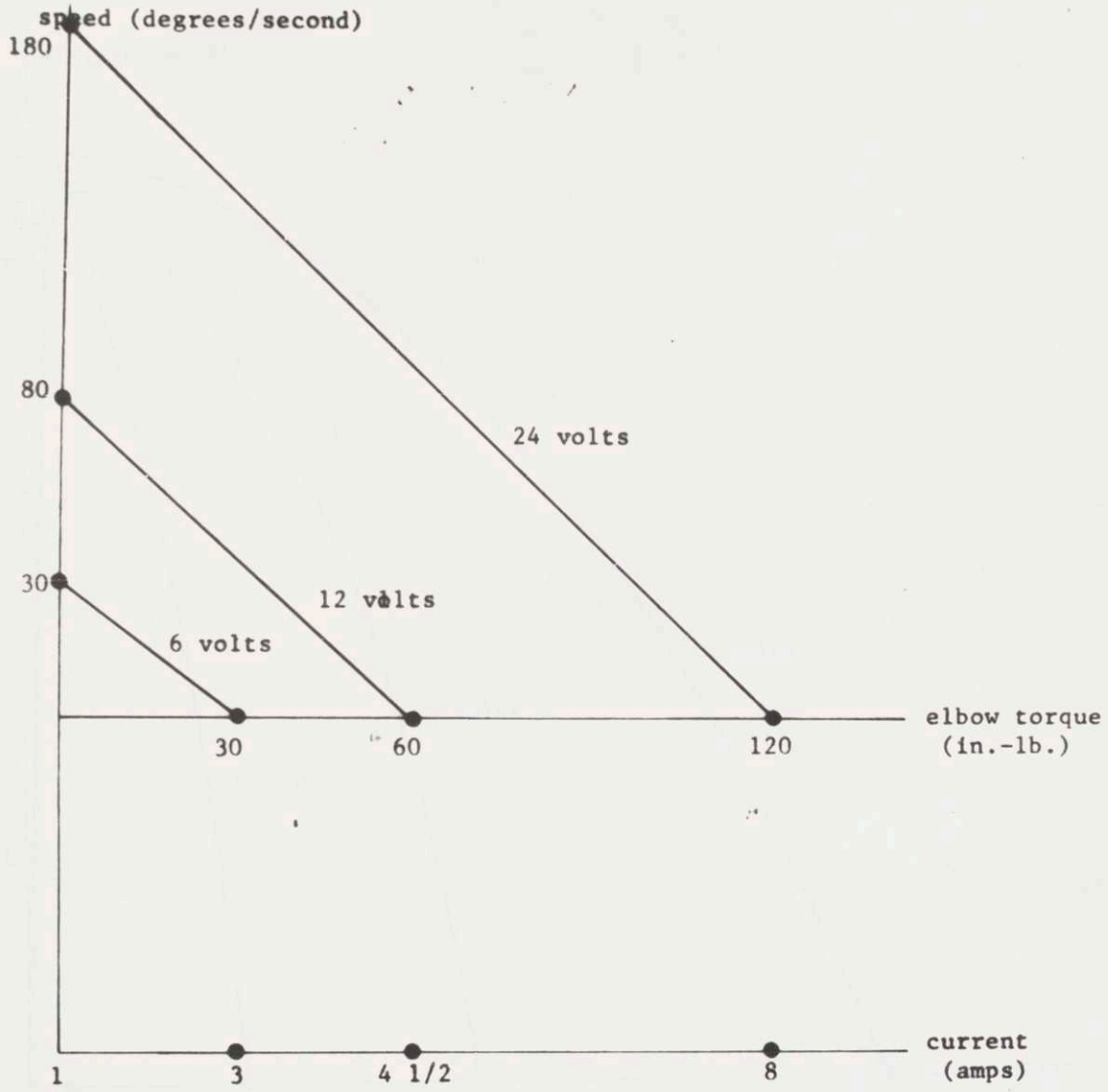

Actuator Characteristics

figure 9

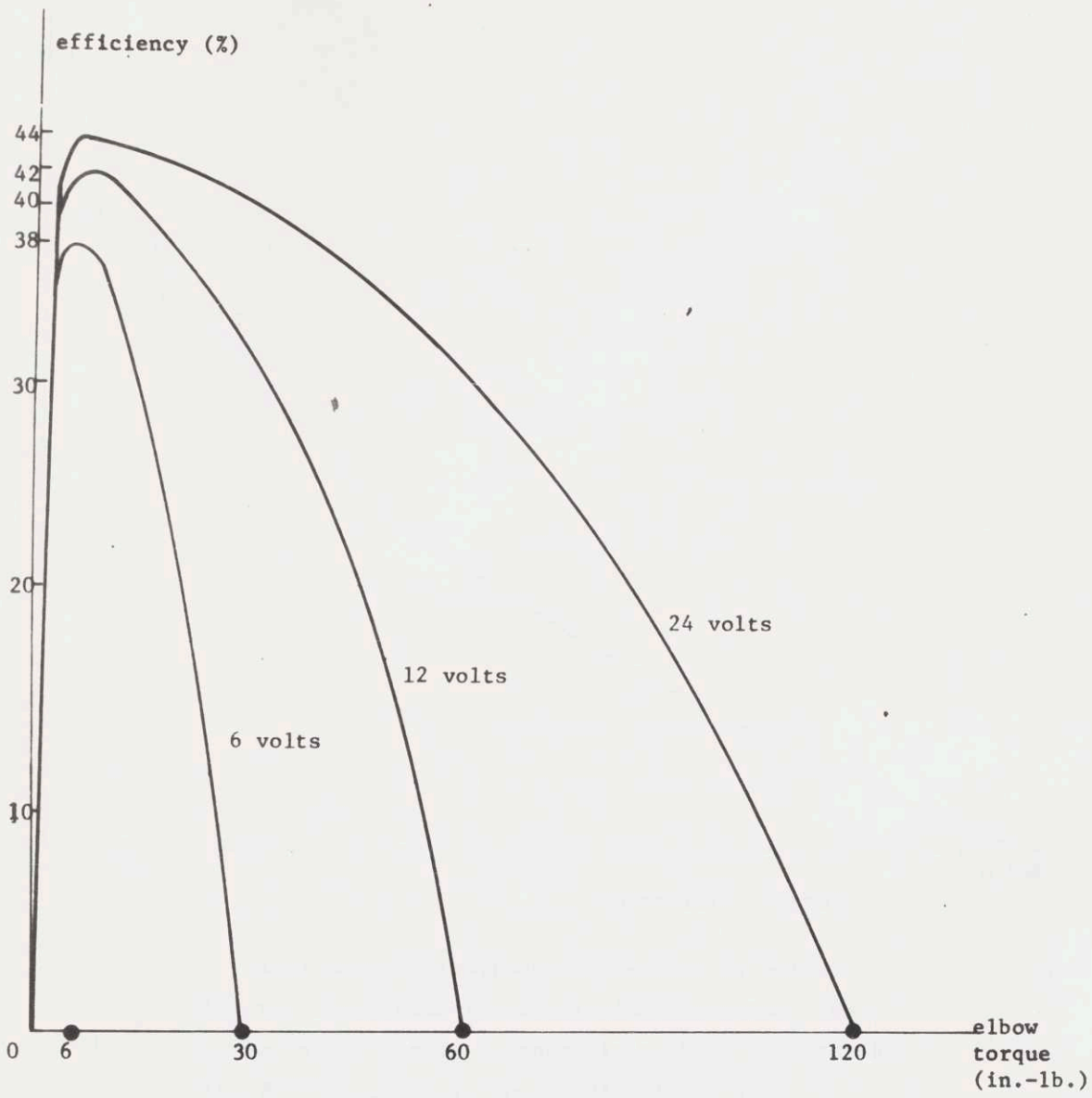

Actuator Characteristics

figure 10

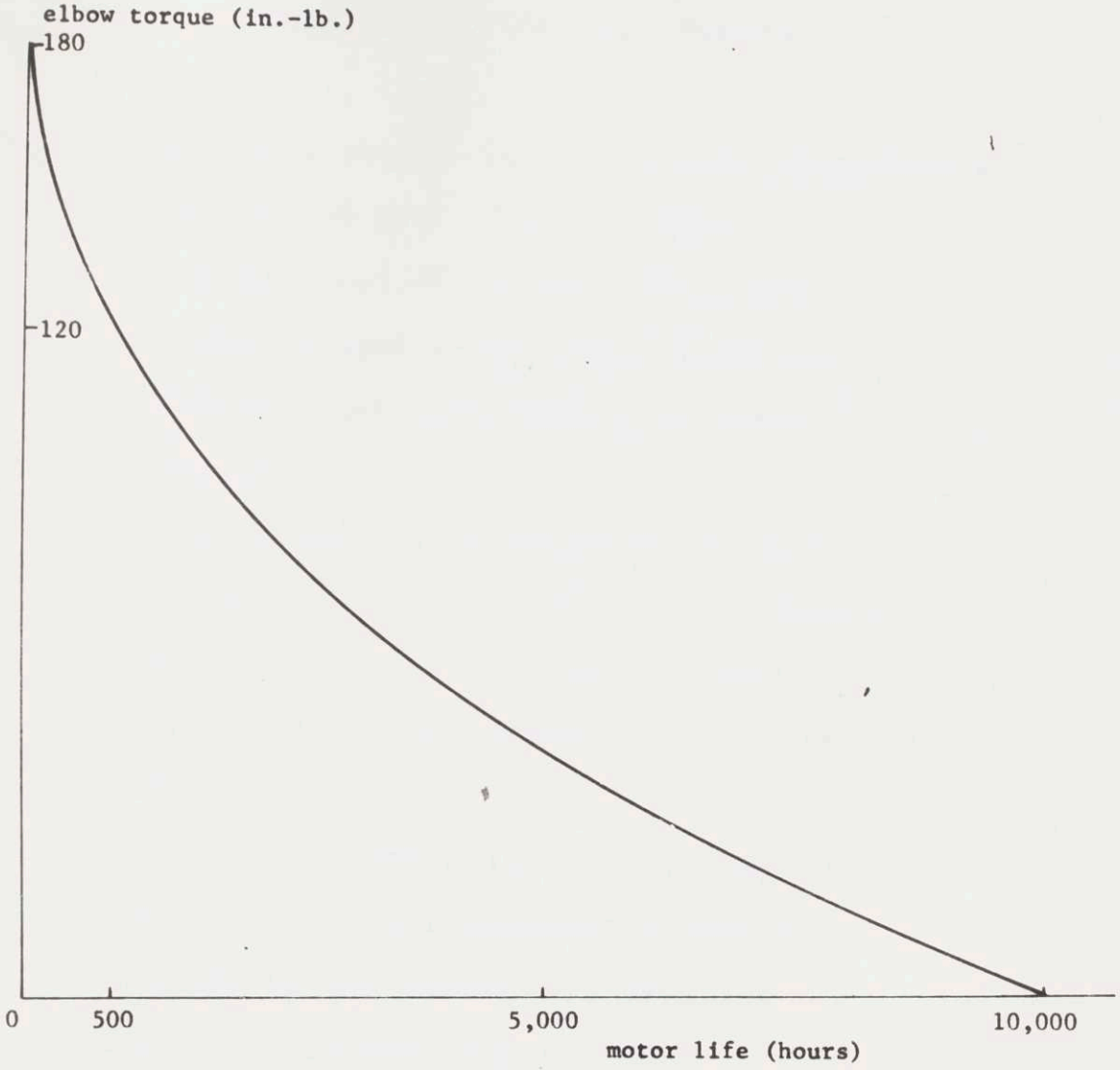

This plot is indirectly a measure of motor life vs. resistance in series with the motor. 180 in.-lb. elbow torque is possible with no resistance. With R=2 ohms, elbow torque T=120 in.-lb.(max.)

figure 11

BIBLIOGRAPHY

1. Gibson,"Nonlinear Automatic Control", McGraw-Hill, 1963
2. Globe Industries, Inc.; Actuator literature; 1784 Stanley Ave.; Dayton, Ohio
3. Gould-National Batteries, Inc.; data on nickel-cadmium cells and batteries; First National Bank Bldg.; St. Paul, Minnesota
4. National Academy of Sciences, Committee on Prosthetics Research and Development, "The Application of External Power in Prosthetics and Orthotics", publication #874, 1961
5. Paul,I., "An Investigation of Compact Power Sources for Externally Powered Prosthetic and Orthopedic Devices", MIT; M.S. Thesis, August 1961